Low Voltage Marine Motors

Making you more competitive

ABB offers a complete range of low voltage motors, ensuring that the right motor can be found for every need including special and hazardous environments. Low voltage motors are available in aluminum, steel and cast iron frames with an output range of 0.09 – 1200 kW. More information at **http://www.abb.com/motors&drives**.

Applications:

In the marine industry, low voltage motors are used, both on- and under deck, in applications such as engine room pumps, steering pumps, cargo pumps, ventilation fans, deck cranes, thrusters, winches, hydraulic power packs, and compressors.

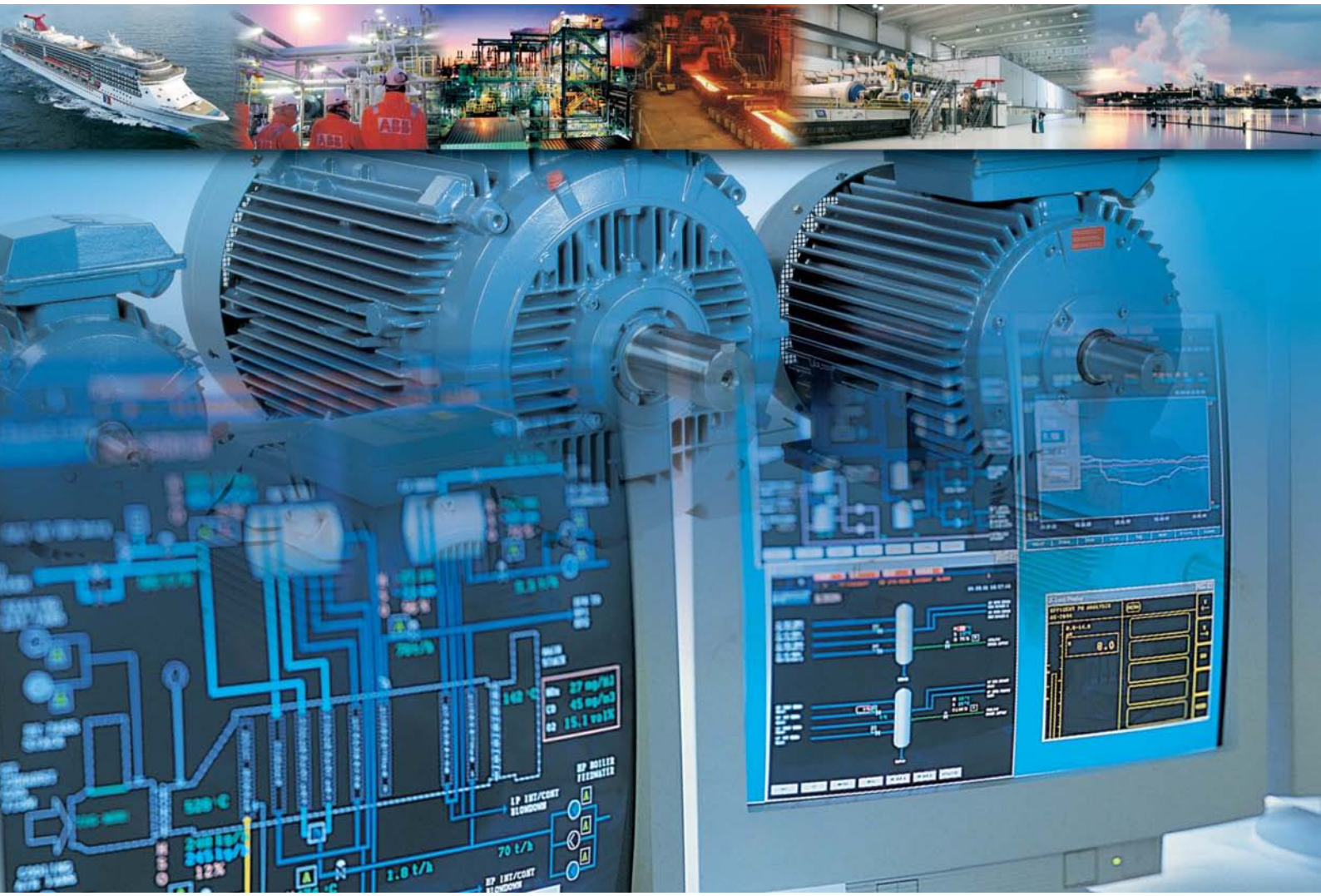

ABB (www.abb.com) is a global leader in power and automation technologies that enable utility and industry customers to improve their performance while lowering environmental impact. The ABB Group of companies operates in around 100 countries and employs about 107.000 people.

Low Voltage Marine Motors

Sizes 56 to 450, from 0.06 to 1000 kW

Contents | Page

1	General information	4
2	Aluminum motors	11
3	Steel motors	53
4	Cast iron motors	75
5	Open drip proof motors	131
6	Other motor types	147

ABB reserves the right to change the design, technical specification and dimensions without prior notice.

General information

ABB's motors comply with all the requirements of classification societies, ship owners, shipyards and manufacturers of ship based products for applications such as fans, pumps and compressors, hydraulic pumps, lifting and cargo systems, offering economical and reliable high performance in heavy-duty operation.

1

A comprehensive range of low voltage motors for marine applications

Three-phase motors: Totally enclosed IP 55 and open drip proof IP 23, squirrel cage motors

Two-speed motors for fan and pump drives with constant torque.

Motors for hazardous areas. For hazardous area motors in marine applications, please contact ABB for further information. See also our product catalogue, Motors for Hazardous Areas.

Motors for open deck mounting: IP 56, with or without fan and cover.

Water cooled motors: IC71W, squirrel cage motors for all kind of applications, including VSD applications.

Variable speed drive compatibility: Optimised performance in VSD applications based on ABB's leading frequency converter technology.

Naval motors: ABB motors have been succesfully tested by several world's navies, for instance for shock resistance, in the most demanding environments. The motors on test have been ABB standard motors.

Special designs: As well as providing an extensive range of modifications to existing standard motors, ABB can also manufacture customised motors, which is a particular interest in the field of special drive applications.

Standards and classification societies

ABB's marine motors comply with the following international standards.

Standard motors
IEC Publ. 60034, 60072, 60079, 60085 and 60092-series
VDE 0530
DIN
SFS
SEN
EN
CENELEC

ABB's marine motors are certified to all major international classification societies. For more information see the chapters 'Variant codes'.

Classification societies	
ABS	American Bureau of Shipping
BV	Bureau Veritas
CCS	China Classification Societies
CR	China Corporational Register of Shipping
DNV	Det Norske Veritas
GL	Germanischer Lloyd
KR	Korean Register of Shipping
LR	Lloyd's Register of Shipping
NK	Nippon Kaiji Kyokai
RINA	Registro Italiano Navale
RS	Russian Maritime Register of Shipping

Permissible temperature rise

Classification societies and standards	Ambient temperature °C	Permissible temperature rise in K for stator windings insulation class B	F
Industrial Motors			
IEC Publ. 60034-1	40	80	105
Marine Motors			
IEC 92-301 [1]	50	70	90
ABS	50	70	95
BV	45	75	100
CCS	45	75	100
CR	45	75	95
DNV	45	70	95
GL	45	75	100
KR	45	75	95
LR	45	70	95
NK	45 [2]	75	100
RINA	45	75	100
RS	45	75	95

[1] Electrical installation in ships

[2] Motors for hazardous areas: required ambient temperature 50°C. Permissible temperature rise B class 70 K, F class 95 K.

The catalogue values are based on motors for marine duty with temperature 90 K. If a lower temperature rise is needed, i.e. class B (70 K) is needed, it is necessary to reduce the rated output. As an indication the following formula can be used

$$P2 = P1 \times \sqrt{\frac{70}{\Delta_t}}$$

P1 = output according to catalogue value
P2 = new output according to class B rise (70 K)
Δ_t = actual temperature rise, normally 90 K

1

”Essential” and “Non-essential service”

Depending on the motor application, the classification societies, for example ABS, BV, GL and LR normally classify equipment as suitable for “Primary Essential Service” and “Secondary Essential Service”. In this catalogue terms “Essential Service” and “Non-Essential Service” are used.

The requirements regarding testing, test reports and certification of motors for “Essential Service” are more demanding than for “Non-Essential Service”. For example, motors over 100 kW for “Essential Service” on a ship registered by Lloyd’s Register of Shipping must be certified by Lloyd’s.

For detailed information, please see the table on the next page. The table shows ABB’s type approved motors. For any specific customer needs, application-specific certification or case-by-base certification, please contact ABB.

Examples of “Essential Service” equipment according to Lloyd’s Register of Shipping. Other classification societies may have other requirements:

Air compressors for heavy oil engines
Scavenge blowers
Air pumps
Ballast pumps
Bilge pumps
Circulating and cooling water pumps
Condenser circulating pumps
Extractions pumps
Feed water pumps
Fire pumps
Lubrication oil pumps
Oil fuel pumps and oil fuel burning units
Cargo refrigerating motors, including compressors, brine pumps, circulating pumps, fans etc.
Fans for force draught to boilers
Steering gear
Windlasses
Ventilating fans for engine room and boiles rooms
Oil separators

Requirements for electric motors used in Essential and Non-Essential Services according to Classification Societies' Requirements

Classification Society's requirements and standard test procedure									ABB Type Approved motors				
Classification Society	Required ambient max. temperature	Max. temper. Rise accepted by Classsif. Societes degree C. B/F	Duty [1]	Output limit kW	Witnessed test requirement	Type Test report accepted when based on motor with identical data	Complete test on motor no 1, routine test for remaining batch +147/153	Works certificate	Aluminum motors [4]	Cast iron motors	Steel motors	Open drip proof motors	Flame-proof motors Ex d, Ex de
ABS[3]	50	70 / 90	N										
			E	< 100		x							
			E	≥ 100	x		x		112-280	160-400	280-400	280-400	160-315
BV	45	75 / 100	N										
			E	< 100		x							
			E	≥ 100	x		x		112-280	160-400	280-400	280-400	160-355
CCS	45	75 / 100	N		x		x						
			E	< 100	x		x						
			E	≥ 100	x		x		112-280	160-355	280-400	280-400	160-250
CR	45	75 / 95	N										
			E	No limit	x		x		112-280	160-250			
DNV	45	75 / 100	N										
			E	≥ 10 <100		x		x					
			E	≥ 100 <300			x	x					
			E	≥ 300	x		x			160-400	280-400	280-400	160-400
GL	45	75 / 100	N										
			E	< 50		x							
			E	≥ 50	x		x		112-280	160-400	280-400	280-400	160-400
KR	45	75 / 95	N										
			E	< 7.5		x							
			E	≥ 7.5	x		x		112-280	160-315	280-400	280-400	80-315
LR	45	70 / 95	N										
			E	< 100		x							
			E	≥ 100	x		x						
NK[2]	45	75 / 100	N										
			E	< 100									
			E	≥ 100					112-280	160-400	280-400	280-355	
RINA	45	75 / 100	N										
			E	< 100		x							
			E	≥ 100	x		x		56-280	280-400	280-400	280-400	280-400
RS	45	75 / 95	N										
			E	< 50		x			56-250				
			E	≥ 50	x		x		225-250	160-400	280-400	280-400	80-400

[1] Duty
N = Non Essential Service (No document requirement)
E = Essential Service

[2] NK Essential Service and Japanese flag = No kW limit.

[3] Product Design Approval

[4] For smaller sizes see 'Variant code' pages.

Testing of marine motors with variable speed drives, please contact ABB.

Documents supplied with the motors

Classification Society	Duty	Output limit kW	Test confirmation or Routine test report variant code 140 or 148 [1]	Type test report; type test as basis, variant code 145 [2]	Classification societys's certificate based on witness test [3]	Classification cocietys's certificate issued with ABB's test report as basis [4]	Serial no. and documentation not required by Classification societies [5]	Classified shaft material ⇒375 kW classified shaft required. EN 10204 3.2	Classified shaft material ⇒100 kW classified shaft required. EN 10204 3.1
ABS	N		x				x		
	E	< 100		x					
	E	≥ 100			x			x [8]	
BV	N		x				x		
	E	< 100	x						
	E	≥ 100			x	x			x [8]
CCS	N				x	x			
	E	< 100			x	x			
	E	≥ 100			x	x			
CR	N		x				x		
	E	No limit			x	x			
DNV	N		x				x		
	E	< 100		x					
	E	≥ 100 <300			[7]				
	E	≥ 300			x	x			
GL	N		x				x		
	E	< 50	x						
	E	≥ 50			x	x			x [8]
KR	N		x				x		
	E	< 7.5	x						
	E	≥ 7.5			x	x			x
LR	N		x				x		
	E	< 100		x					
	E	≥ 100			x				x
NK[6]	N		x				x		
	E	< 100	x						
	E	≥ 100			x	x		x	
RINA	N		x				x		
	E	< 100	x						
	E	≥ 100			x	x			x [8]
RS	N		x				x		
	E	< 50			x	x			
	E	≥ 50			x	x			

For Non-Essential Services no special requirements for documentation.

1) Variant code 140 = Test Confirmation or 148 = Routine Test Report (included in marine design)

2) Variant code 145 = Type Test Report (Type test as basis) (included in marine design)

3) Classification Society's Certificate based on witness test (Classifi cation Society's Certificate fee will be charged)

4) Classification Society's Certificate issued with ABB's Test Report as basis (Classification Society's Certificate fee will be charged)

5) Serial No. and Documentation not required by Classification Societies. (Upon request ABB can supply Test Confirmation/Type Test Report).

6) NK Essential Service and Japanese flag = No kW limit.

7) Product certificate is not needed, manufacturers Works Certificate is applicable when Type Approval is valid

8) Only for propulsion services/plants.

General technical specification

Mechanical and electrical design

Mounting arrangements

	Code I/Code II						Product code pos. 12
Foot-mounted motor.	IM B3 IM 1001	IM V5 IM 1011	IM V6 IM 1031	IM B6 IM 1051	IM B7 IM 1061	IM B8 IM 1071	A = foot-mounted, term.box top R = foot-mounted, term.box RHS L = foot-mounted, term.box LHS
Flange-mounted motor, large flange	IM B5 IM 3001	IM V1 IM 3011	IM V3 IM 3031	*) IM 3051	*) IM 3061	*) IM 3071	B = flange mounted, large flange
Flange-mounted motor, small flange	IM B14 IM 3601	IM V18 IM 3611	IM V19 IM 3631	*) IM 3651	*) IM 3661	*) IM 3671	C = flange mounted, small flange
Foot- and flange-mounted motor with feet, large flange	IM B35 IM 2001	IM V15 IM 2011	IM V36 IM 2031	*) IM 2051	*) IM 2061	*) IM 2071	H = foot/flange-mounted, term.box top S = foot/flange-mounted, term.box RHS T = foot/flange-mounted, term.box LHS
Foot- and flange-mounted motor with feet, small flange	IM B34 IM 2101	IM 2111	IM 2131	IM 2151	IM 2161	IM 2171	J = foot/flange-mounted, small flange
Foot-mounted motor, shaft with free extensions	IM 1002	IM 1012	IM 1032	IM 1052	IM 1062	IM 1072	

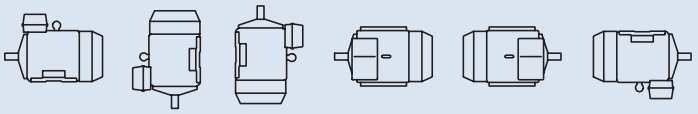

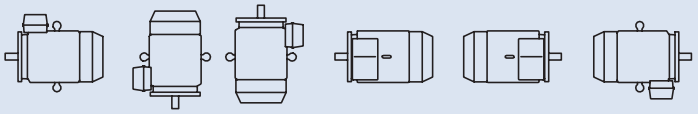

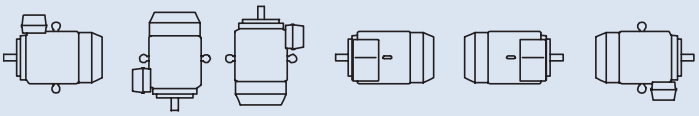

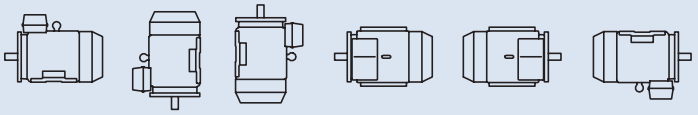

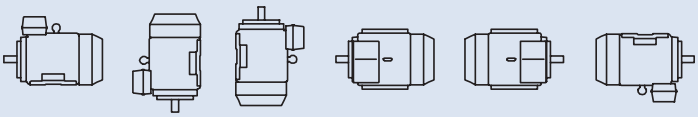

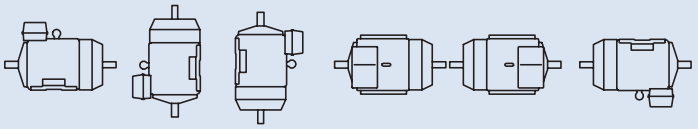

*) Not stated in IEC 60034-7.

Cooling

Designation system concerning methods of cooling refers to standard IEC 60034-6.

Example

IC 4 (A) 1 (A) 6

International Cooling

Circuit arrangement
0: Free circulation (open circuit)
4: Frame surface cooled

Primary coolant
A for air (omitted for simplified designation)

Method of movement of primary coolant
0: Free convection
1: Self-circulation
6: Machine-mounted independent component

Secondary coolant
A for air (omitted for simplified designation)
W for water

Method of movement of secondary coolant
0: Free convection
1: Self-circulation
6: Machine-mounted independent component
8: Relative displacement

1

Degrees of protection: IP code/IK code

The classification of degrees of protection provided by enclosures are refers to:
- Standard IEC 60034-5 or EN 60529 for IP code
- Standard EN 50102 for IK code

IP protection:
Protection of persons against getting into contact with (or approaching) live parts and against contact with moving parts inside the enclosure.
Also gives protection for the machine against ingress of solid foreign objects, as well as protection of machines against harmful effects due to the ingress of water.

IP 5 5

Characteristic letter

Degree of protection to persons and to parts of the motors inside the enclosure
2: Motors protected against solid objects greater than 12 mm
4: Motors protected against solid objects greater than 1 mm
5: Dust-protected motors

Degree of protection provided by the enclosure with respect to harmful effects due to ingress of water
3: Motors protected against spraying water
4: Motors protected against splashing water
5: Motors protected against water jets
6: Motors protected against heavy seas

IK code :
Classification of degrees of protection provided by enclosure for motors against external mechanical impacts.

IK 08

International mechanical protection

Characteristic group

Relation between IK code and impact energy:

IK cod	IK 0	IK 01	IK 02	IK 03	IK 04	IK 05	IK 06	IK 07	IK 08	IK 09	IK 10
Impact energy Joule	*	0.15	0.2	0.35	0.5	0.7	1	2	5 ABB Standard	10	20

*not protected according to EN 50102

Insulation

ABB uses class F insulation systems, which, with temperature rise B, is the most common requirement in industry today.

The use of Class F insulation with Class B temperature rise gives ABB products a 25° C safety margin. This can be used to increase the loading by up to 12 per cent for limited periods, to operate at higher ambient temperatures or altitudes, or with greater voltage and frequency tolerances. It can also be used to extend insulation life.

Class F insulation system
- Max ambient temperature 40° C
- Max permissible temperature rise 105 K
- Hotspot temperature margin + 10 K

Class B rise
- Max ambient temperature 40° C
- Max permissible temperature rise 80 K
- Hotspot temperature margin + 10 K

Insulation system temperature class
- Class F 155° C
- Class B 130° C
- Class H 180° C

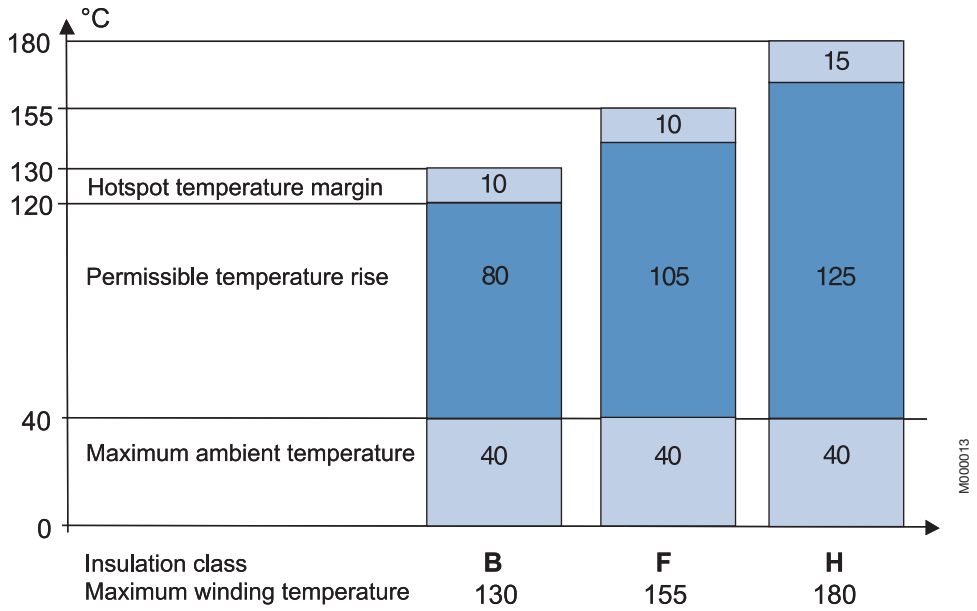

Safety margins per insulation class

High efficiency

ABB's motors are designed for the highest possible efficiency, aiming to save energy and operation costs during the whole lifetime of the motor.

Noise level

The motors are designed for low noise level. Data for 50 Hz can be found in the product catalogues (General Purpose Motors and Process Performance Motors).The noise level at 60 Hz is approximately 4 dB(A) higher.

Surface treatment

Special attention has been paid to the finish of ABB's motors. All parts are treated by the method most appropriate to each material, giving reliable anti-corrosion protection under severe environmental conditions. The color is blue, Munsel color code: 8B, 4.5/3.25 (NCS4822-B05G the closest shade in other standards). Specific details of paint types are available on request.

Thermal protection

Thermistors (PTC) are fitted as standard in the windings of the motors M2BA 71 to 132, M3AA 200 to 280, M2AA 250, M3_ 280 to 450. For other sizes, this type of protection is optional.

Marine Aluminum Motors

Totally enclosed squirrel cage three phase low voltage motors, Sizes 56 - 280, 0.06 to 88 kW

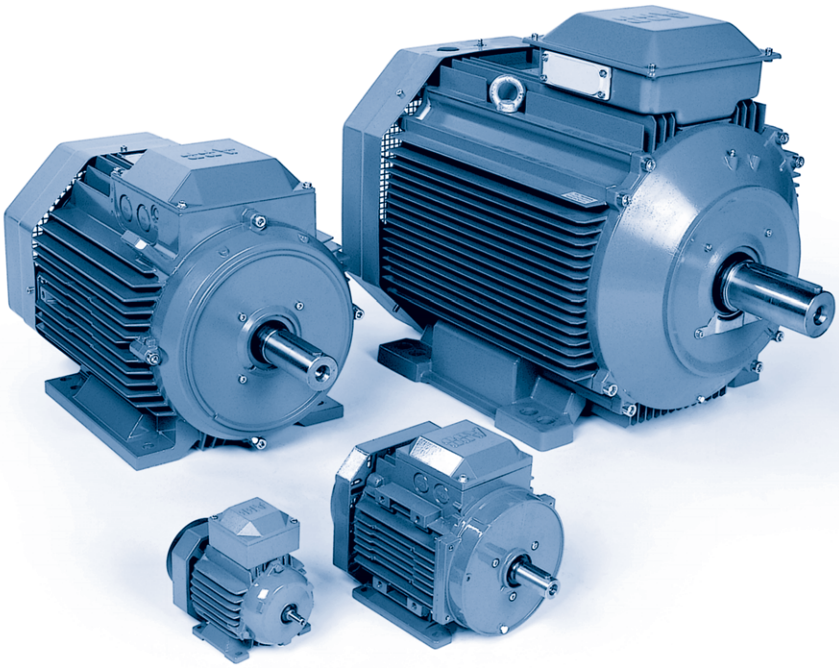

2

www.abb.com/motors&drives

> Motors
>> LV Motors >>> Marine Motors

Mechanical design..... 12

Rating plates..... 22

Ordering information..... 23

Technical data..... 24

Variant codes..... 42

Dimension drawings..... 49

Aluminum motors in brief..... 50

Mechanical design

Stator

Stator framework, bearing shields and feet are made of an extra corrosion resistant aluminum alloy with low copper content with the following exceptions:
M2AA 180-250 and M3AA 250 SMA-2 basic version, have cast iron feet.
M3AA 280 has feet and D-end shield of cast iron.

M3AA 250 SMB 2-pole, high output version, as well as M3AA 280 2-pole have cast iron feet and bearing shields.

The flange bearing shields of sizes 180 to 280 are made of cast iron.

Drain holes

2

Motors that will be operated in very humid or wet environments and especially under intermittent duty should be provided with drain holes. The appropriate IM designation, such as IM 3031, is specified on the basis of the method of mounting the motor.

Motors are provided with closable plastic plugs in the drain holes. The plugs will be open on delivery. When mounting the motors it should be ensured that the drain holes face downwards. In the case of vertical mounting, the upper plug must be hammered home completely. In very dusty environments both plugs should be hammered home.

Sizes 56 to 63 are supplied as standard with drain holes on D-end while sizes 71 to 280 are supplied with drain holes both on D-end and N-end.

When mounting arrangement differs from foot mounted IM B3, please mention variant code 066 when ordering.

See variant codes 065, 066 and 076 under the heading “Drain holes”.

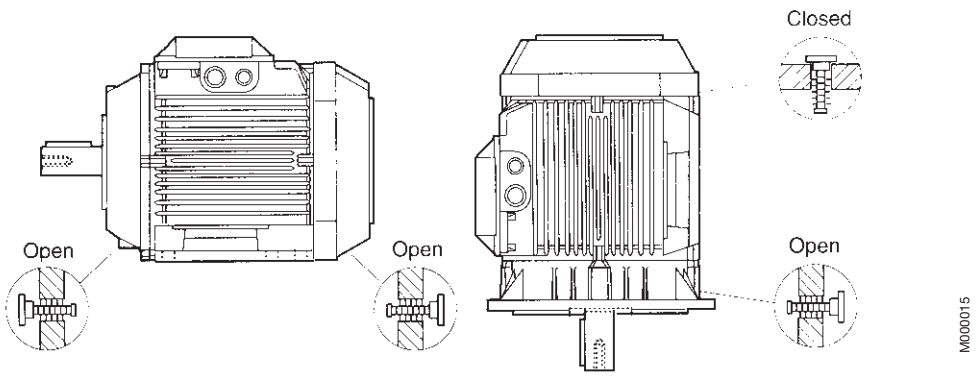

Terminal box

Sizes 56 to 180 and M2AA 200
The terminal box is made of aluminum alloy and is located on top of the stator. The lower part of the box is integrated with the stator. It is provided with 2 knockout openings on each side. Sizes 160-180 also have a third smaller opening. Cable glands are not included with the exception of frame sizes 90 and 100 where cable glands are included.

Sizes 200 to 280, except M2AA 200
The terminal box and cover are made of deep drawn steel and mounted on top of the stator. The box is bolted to the stator and is not rotatable. The size of the box is the same for all motors.

In the basic design the terminal box is provided with two FL 13 flange openings, one on each side. The opening on the right side, seen from the D-end, is supplied with a flange with two holes for M40 cable glands. On delivery the holes are sealed by means of plastic plugs. Cable glands are not supplied. The opening on the other side is provided with a cover flange.

The motors can also be provided with an extra large terminal box, standard for voltage code S and frame size 280. See variant code 019 under the heading “Terminal box”. This will increase the dimension HD by 32 mm. The box is supplied with two FL 21 openings. The right opening is provided with a flange with two holes for M63 cable glands. The holes are sealed by means of plastic plugs. Cable glands are not supplied. The opening on the other side is provided with a cover flange. The box can also be provided with an FL 13 opening towards the N-end.

When new motors are manufactured the terminal box can be mounted on the left or the right side. See variant codes 021 and 180 under the heading “Terminal box”.

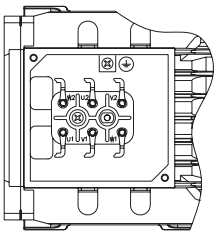

Terminal box size 56-80.

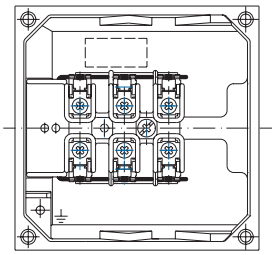

Terminal box size 90-100.

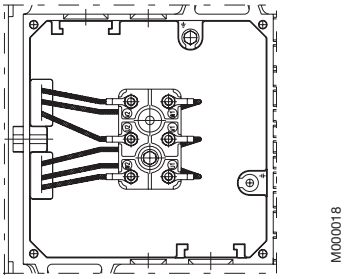

Terminal box size 112-132.

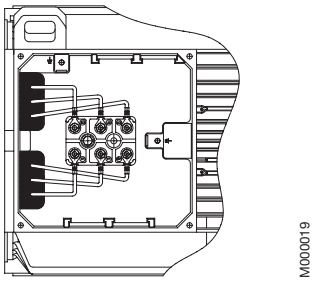

Terminal box size 160-180 and M2AA 200.

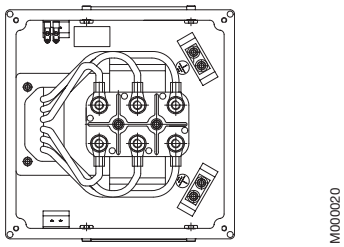

Terminal box size 200-280, except M2AA 200.

Connections

The terminal block is provided with 6 terminals for connecting Cu-cable. The terminals are marked in accordance with IEC 60034-8.

Connection openings

Motor size	Opening	Metric cable entry	Method of connection	Terminal bolt size	Maximum connectable Cu-cable area, mm²
56-63	Knock-out opening	1 x M16 x 1.5 1 x Pg 11	Screw terminal	M4	2.5
71-80	Knock-out opening	2 x M20 x 1.5 2 x Pg 16	Screw terminal	M4	4
90-100	Knock-out opening	2 x (M20 + M25)	Screw terminal	M4	6
112-132	Knock-out opening	2 x (M25 + M20)	Cable lug	M5	10
160-180	Knock-out opening	2 x (2 x M40 + M16)	Cable lug	M6	35
200 [1]	Knock-out opening	2 x (2 x M40 + M16)	Cable lug	M6	35
200-250 [2]	2 x FL 13	1 x (2 x M40 + M16)	Cable lug	M10	70
280	2 x FL 21	1 x (2 x M63 + M16)	Cable lug	M10	70

[1] M2AA [2] M2AA 200 excluded

Bearings

The motors are provided with bearings according to the tables below.

Greater axial forces can be tolerated if the motors are provided with angular contact ball bearings. Note that in such cases the axial force must only operate in one direction.

Motor versions with roller bearings tolerate greater radial forces.

Basic version with deep groove ball bearings

Basic design motors Motor size		Foot- and flange-mounted motor D-end	 N-end
56		6201-2Z/C3	6201-2Z/C3
63		6202-2Z/C3	6201-2Z/C3
71		6203-2Z/C3	6202-2Z/C3
80		6204-2Z/C3	6203-2Z/C3
90		6205-2Z/C3	6204-2Z/C3
100		6306-2Z/C3	6205-2Z/C3
112 [2]	short	6206-2Z/C3	6205-2Z/C3
112 [2]	long	6206-2Z/C3	6206-2Z/C3
132 [2]	short	6208-2Z/C3	6206-2Z/C3
132 [2]	long	6208-2Z/C3	6208-2Z/C3
160		6309-2Z/C3	6209-2Z/C3
180		6310-2Z/C3	6209-2Z/C3
200 [1]		6312-2Z/C3	6209-2Z/C3
200		6312/C3	6210/C3
225 [1]		6313/C3	6210/C3
225		6313/C3	6212/C3
250 [1]		6315/C3	6212/C3
250		6315/C3	6213/C3
280	2-pole	6315/C3	6213/C3
280	4-8 pole	6316/C3	6213/C3

[1] M2AA
[2] short: M2AA 112: M-2,M-4; M2AA 132: SA-2, SB-2, S-4, M-4
M3AA 112: M-6, M-8; M3AA 132: SA-2, S-4, S-6, MA-6, MB-6, S-8, M-8, S-two-speed
long: remaining versions

Alternative designs:

Version with roller bearings

It is recommended to use roller bearings in belt drives for motor sizes 160 - 280.

See variant code 037 under the heading “Bearings and lubrication”.

Motor size		D-end	N-end
90		NU 205	–
100		NU 306	–
160		NU 309 ECP	–
180		NU 310 ECP	–
200		NU 312 ECP	–
225		NU 313 ECP	–
250		NU 315 ECP	–
280	2-pole	NU 315 ECP	–
280	4-8 pole	NU 316 ECP	–

Version with angular contact ball bearings

See variant codes 058 and 059 under the heading “Bearings and lubrication”.

Motor size		D-end 058	N-end 059
90		7205 B	7204 B
100		7306 B	7205 B
112 [2]	short	7206 BE	7205 BE
112 [2]	long	7206 BE	7206 BE
132 [2]	short	7208 BE	7206 BE
132 [2]	long	7208 BE	7208 BE
160 [1]		7309 BE	7209 BE
180 [1]		7310 BE	7209 BE
200 [1]		7312 BE	7210 BE
225 [1]		7313 BE	7212 BE
250 [1]		7315 BE	7213 BE
280	2-pole	7315 BE	7213 BE
280	4-8 pole	7316 BE	7213 BE

[1] M2AA on request
[2] short: M2AA 112: M-2,M-4; M2AA 132: SA-2, SB-2, S-4, M-4
M3AA 112: M-6, M-8; M3AA 132: SA-2, S-4, S-6, MA-6, MB-6, S-8, M-8, S-two-speed
long: remaining versions

Transport locking

Motors provided with roller bearings or angular contact ball bearings are fitted with a transport lock to prevent damage to the bearings, due to vibration, during transport.

Axially-locked bearings

The table below shows which of the motor's bearings are axially locked in the bearing seat. In motor sizes 56 to 80 the locking is done by an inner bearing circlip, in motor sizes 90 to 280 by an inner bearing cover.

See also variant code 042 under the heading "Bearings and lubrication".

Motor size	Foot-mounted motors	Flange-mounted motors	
		Large flange	Small flange
56-63	On request at D-end	On request at D-end	On request at D-end
71-80	On request at D-end	D-end	On request at D-end
90-100	D-end [1]	D-end [1]	D-end [1]
112-132	D-end [1]	D-end	D-end
160-280	D-end	D-end	–

[1] **A spring-washer at the N-end presses the rotor toward the D-end.**

Lubrication

The motors are delivered with bearing grease for use at normal temperatures in dry or humid environments. The motors are lubricated for ambient temperatures 40°C and in some cases even above 40°C, see table 1 next page.

Motor sizes 56 to180 and M2AA 200 are provided with shielded bearings. On request, motor sizes 90 to 180 and M2AA 200 are provided with grease nipples for regreasing, see variant code 041 under the heading "Bearings and lubrications".

Motor sizes 200 to 280, except M2AA 200, are provided with grease nipples for re-greasing as standard.
The lubrication interval L_1, suitable for relubricated bearings, is defined as the number of operating hours after which 99 per cent of the bearings are adequately lubricated.

Lubrication intervals and grease quantities are specified on a plate on the motor as well as in the manual supplied with the motor.

The grease lifetime L_{10}, suitable for permanent lubricated bearings, is defined as the number of operating hours after which 90 per cent of the bearings are adequately lubricated. 50 per cent of the bearings achieve two times this figure. Maximum lifetime, however, should be regarded as 40,000 hours.

In case of high ambient temperatures the shaft loads must be reduced compared to permissible loadings in the tables, please contact ABB.

Table 1: Grease lifetime L_{10} in deep groove ball bearings of type 2Z in horizontally mounted motors in continuous running duty.

Motor	r/min	Ambient temperature and rated output											
		25 °C		40 °C		50 °C		60 °C		70 °C		80 °C	
		Basic	High	Basic	High	Basic	High	Basic	High	Basic	High	Basic	High
56-63	3000	40000	40000	40000	40000	40000	40000	40000	40000	40000	40000	40000	27000
	1500												37000
	1000												
	750											32000	
71	3000	40000	40000	40000	40000	40000	40000	40000	40000	40000	40000	40000	27000
	1500												37000
	1000												
	750											32000	
80	3000	40000	40000	40000	40000	40000	40000	40000	30000	24000	19000		
	1500								40000	40000	29000	40000	
	1000										40000		
	750								32000			32000	
90	3000	40000	40000	40000	40000	40000	40000	30000	24000	19000	15000		
	1500							40000	40000	24000	40000	40000	
	1000									36000	36000		
	750								31000	40000		31000	
100	3000	40000	40000	40000	40000	40000	35000	40000	22000	27000	14000	17000	
	1500				33000		21000			33000		21000	
	1000				40000		33000			40000		40000	
	750						40000		30000	37000			
112	3000	40000	40000	40000	40000	40000	30000	26000	17000				
	1500				40000			27000					
	1000				35000			40000					
	750				35000			40000					
132	3000	40000	40000	40000	24000	40000		23000					
	1500				40000		22000	40000		35000			
	1000						30000			35000			
	750						40000			35000			
160	3000	40000	40000	40000	31000	26000	17000	14000	9000				
	1500				40000	40000	25000	37000					
	1000						25000	30000					
	750						30000	30000					
180	3000	40000	38000	38000	34000	34000	29000	20000	15000	10000	8000		
	1500		40000	40000	38000	40000	20000	28000		15000			
	1000				40000		40000	40000	20000	30000			
	750				40000		30000	40000					
M2AA 200	3000	27000		27000		20000		11000					
	1500	40000		38000		38000		22000					

In vertically mounted motors, the grease lifetime is half the figures above. For applications corresponding to the empty cells in the table, please contact ABB. These applications can imply reduced lifetime for bearings and winding.

Lubrication intervals

ABB follows the L_1-principle in defining lubrication interval. That means that 99% of the motors are sure to make the interval time. The lubrication intervals can also be calculated according to the L_{10}-principle, which are normally doubled compared to L_1-values. Values available from ABB at request.

The table below gives lubrication intervals according to the L_1-principle for different speeds. The values are valid for horizontal mounted motors (B3), with about 80°C bearing temperature and using good quality grease with lithium complex soap and with mineral or PAO-oil.

For more information, see ABB's Low Voltage Motors Manual.

Frame size	Amount of grease g	3600 r/min	3000 r/min	1800 r/min	1500 r/min	1000 r/min	500-750 r/min
Ball bearings: lubrication intervals in duty hours							
180	30	6000	8000	13500	16000	20000	23000
200	40	4000	6000	11000	13000	17000	21000
225	50	3000	5000	10000	12500	16500	20000
250	60	2500	4000	9000	11500	15000	18000
280	35	2000	3500	-	-	-	-
280	70	-	-	8000	10500	14000	17000

Frame size	Amount of grease g	3600 r/min	3000 r/min	1800 r/min	1500 r/min	1000 r/min	500-750 r/min
Roller bearings: lubrication intervals in duty hours							
180	30	3000	4000	7000	8000	10000	11500
200	40	2000	3000	5500	6500	8500	10500
225	50	1500	2500	5000	6000	8000	10000
250	60	1300	2200	4500	5700	7500	9000
280	35	1000	1800	-	-	-	-
280	70	-	-	4000	5300	7000	8500

Permissible loading on shaft

Pulley diameter

When the desired bearing life has been determined the minimum permissible pulley diameter can be calculated with FR, according to the formula:

$$D = \frac{1.9 \cdot 10^7 \cdot K \cdot P}{n \cdot F_R}$$

where:

D = diameter of pulley, mm
P = power requirement, kW
n = motor speed, r/min.
K = belt tension factor, dependent on belt type and type of duty. A common value for V-belts is K = 2.5
F_R = permissible radial force according to the tables

Bearing life

The nominal life is defined as the number of hours that are attained or exceeded by 90% of identical bearings, in a large test series, under certain specified conditions. 50% of the bearings attain a life of as much as 5 times this figure.

The life of bearings is dependent on various factors such as bearing load, motor speed, operating temperature and the purity of the grease. The permissible radial and axial loading for different motor sizes is shown in the table on the following pages.

The table is valid for 50 Hz. For 60 Hz and/or some other bearing life than specified in the table the values are changed according to the table on the right.
The table values assume the occurrence of only radial or axial forces. In the case of simultaneous radial and axial forces information can be supplied on request. It is assumed that the radial force is applied at the end of the motor shaft.

Permissible force at changed bearing life or supply frequency

Bearing life in hours at 50 Hz	Bearing life in hours at 60 Hz	Permissible force, as percentage of value in tables
25,000	21,000	100% of value for 25,000 hours
40,000	33,000	100% of value for 40,000 hours
63,000	52,000	86% of value for 40,000 hours
80,000	67,000	80% of value for 40,000 hours

Permissible radial forces

The table at right shows the permissible radial force in Newton assuming zero axial force.
Permissible loads of simultaneous radial and axial forces will be supplied on request.
The bearing life, L_{10}, is calculated according to SKF's theory on bearing life L_{10aah}, which also takes the purity of the grease into consideration. An adequate lubrication is a necessary prerequisite for the table at right.

If the radial force is applied between points X_0 and X_{max}, the permissible force F_R can be calculated from the following formula:

$$F_R = F_{X0} - \frac{X}{E}(F_{X0} - F_{Xmax})$$

E = length of shaft extension in basic version.

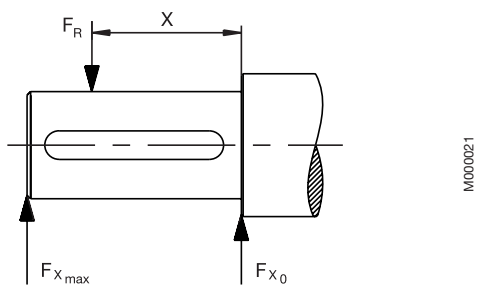

Motor size	No. of poles	Length of shaft extension E (mm)	Ball bearings Basic design with deep groove ball bearings 25,000 hrs FX_0 (N)	FX_{max} (N)	40,000 hrs FX_0 (N)	FX_{max} (N)
56	2	20	240	200	260	200
	4	20	300	200	280	200
	6	20	340	280	340	280
	8	20	340	280	340	280
63	2	23	490	400	490	400
	4	23	490	400	490	400
	8	23	490	400	490	400
71	2	30	680	570	680	570
	4	30	680	570	680	570
	6	30	680	570	680	570
	8	30	680	570	680	570
80	2	40	630	750	930	750
	4	40	930	750	930	750
	6	40	930	750	930	750
	8	40	930	750	930	750
90	2	50	1010	810	1010	810
	4	50	1010	810	1010	810
	6	50	1010	810	1010	810
	8	50	1010	810	1010	810
100[1)]	2	60	2280	1800	2280	1800
	4	60	2280	1800	2280	1800
	6	60	2280	1800	2280	1800
	8	60	2280	1800	2280	1800

[1)] Basic design with 63-series bearings at the D-end.

Permissible radial forces

Motor sizes 112 to 180

Motor size	No. of poles	Length of shaft extention E (mm)	Ball bearings Basic design with deep groove ball bearings 25,000 hrs		40,000 hrs		Alternative design with 63-series bearings 25,000 hrs		40,000 hrs		Roller bearings Alternative design with roller bearings 25,000 hrs		40,000 hrs	
			FX_0 (N)	FX_{max}(N)	FX_0 (N)	FX_{max}(N)	FX_0 (N)	FX_{max}(N)	FX_0 (N)	FX_{max}(N)	FX_0 (N)	FX_{max}(N)	FX_0 (N)	FX_{max}(N)
112 M	2	60	1800	1420	1620	1280	2160	1700	2160	1700				
	4	60	1790	1410	1590	1250	2160	1700	2160	1700				
	6	60	1910	1510	1700	1340	2160	1700	2160	1700				
	8	60	1940	1530	1720	1360	2160	1700	2160	1700				
112 MB	2	60	1820	1470	1640	1330	2100	1700	2100	1700				
	4	60	1770	1430	1560	1260	2100	1700	2100	1700				
	6	60	1880	1520	1650	1340	2100	1700	2100	1700				
	8	60	1930	1560	1690	1370	2100	1700	2100	1700				
132 SA	2	80	3020	2360	2740	2140	4070	3180	3670	2870				
132 SB	2	80	3020	2360	2730	2130	4060	3170	3670	2870				
132 SC	2	80	3030	2430	2750	2200	3990	3200	3690	2960				
132 S	4	80	3120	2440	2790	2180	4090	3200	3830	2990				
132 M	4	80	3080	2410	2750	2150	4100	3200	3780	2950				
132 MB	4	80	3050	2440	2710	2170	3990	3200	3740	3000				
132 S	6	80	3280	2560	2910	2270	4100	3200	3990	3120				
132 MA	6	80	3240	2530	2880	2250	4100	3200	3970	3100				
132 MB	6	80	3200	2500	2840	2220	4100	3200	3930	3070				
132 MC	6	80	3010	2510	2660	2220	3840	3200	3700	3090				
132 S	8	80	3370	2630	2980	2330	4100	3200	4100	3200				
132 M	8	80	3310	2590	2940	2300	4100	3200	4060	3170				
132 MB	8	80	3280	2630	2910	2330	3990	3200	3990	3200				
160 MA	2	110	4470	3500	4470	3500					4470	3500	4470	3500
	8	110	4470	3500	4470	3500					4470	3500	4470	3500
160 M	2	110	4470	3500	4470	3500					4470	3500	4470	3500
	4	110	4470	3500	4470	3500					4470	3500	4470	3500
	6	110	4470	3500	4470	3500					4470	3500	4470	3500
	8	110	4470	3500	4470	3500					4470	3500	4470	3500
160 L	2	110	4470	3500	4470	3500					4470	3500	4470	3500
	4	110	4470	3500	4470	3500					4470	3500	4470	3500
	6	110	4470	3500	4470	3500					4470	3500	4470	3500
	8	110	4380	3500	4380	3500					4380	3500	4380	3500
160 LB	2	110	4470	3500	4470	3500					4470	3500	4470	3500
	4	110	4470	3500	4470	3500					4470	3500	4470	3500
	6	110	4380	3500	4380	3500					4380	3500	4380	3500
	8	110	4380	3500	4380	3500					4380	3500	4380	3500
180 M	2	110	6900	5550	6360	5110					7338	5900	7340	5900
	4	110	7100	5710	6470	5200					7338	5900	7340	5900

Permissible radial forces

Motor sizes 180 to 280

Motor size	No. of poles	Length of shaft extention E (mm)	Ball bearings Basic design with deep groove ball bearings 25,000 hrs		40,000 hrs		Roller bearings Alternative design with 63-series bearings 25,000 hrs		40,000 hrs	
			FX_0 (N)	FX_{max}(N)	FX_0 (N)	FX_{max}(N)	FX_0 (N)	FX_{max}(N)	FX_0 (N)	FX_{max}(N)
180 L	4	110	7050	5670	6410	5150	7340	5900	7340	5900
	6	110	7340	5900	6840	5500	7340	5900	7340	5900
	8	110	7340	5900	6930	5570	7340	5900	7340	5900
180 LB	2	110	6900	5550	6360	5110	7340	5900	7340	5900
	4	110	6990	5670	6350	5150	7280	5900	7280	5900
	6	110	7280	5900	6780	5500	7280	5900	7280	5900
	8	110	7280	5900	6870	5570	7280	5900	7280	5900
M2AA 200	2	110	7000	5800	6300	5200	9100	7500	8100	670
	4	110	6700	5500	5900	4900	9500	7800	8600	7100
M3AA 200 MLA	2	110	4940	4070	4370	3600	9460	7790	9460	7790
	4	110	5360	4410	4690	3860	9460	7790	9460	7790
	6	110	5590	4600	4850	3990	9460	7790	9460	7790
	8	110	5680	4680	4910	4040	9460	7790	9460	7790
M3AA 200 MLB	2	110	4930	4060	4360	3590	9460	7790	9460	7790
	4	110	5290	4360	4630	3810	9460	7790	9460	7790
	6	110	5510	4540	4780	3940	9460	7790	9460	7790
	8	110	5670	4670	4890	4030	9460	7790	9460	7790
M3AA 200 MLC	2	110	4920	4050	4360	3590	9460	7790	9460	7790
	6	110	5380	4430	4640	3820	9460	7790	9460	7790
225 SMA	4	140	5830	4930	5100	4320	9810	8300	9810	8300
	8	140	6400	5420	5550	4700	9810	8300	9810	8300
225 SMB	2	110	5400	4530	4780	4010	10600	8900	10600	8900
	4	140	5750	4870	5030	4260	9810	8300	9810	8300
	6	140	6000	5080	5200	4400	9810	8300	9810	8300
	8	140	6320	5350	5470	4630	9810	8300	9810	8300
225 SMC	2	110	5370	4510	4750	3990	10600	8900	10600	8900
	4	140	5720	4840	5000	4230	9810	8300	9810	8300
	6	140	5930	5020	5130	4340	9810	8300	9810	8300
	8	140	6180	5230	5320	4500	9810	8300	9810	8300
250 SMA	2	140	6970	5620	6180	4980	11290	9100	11290	9100
	4	140	7693	6200	6750	5440	14330	11550	14330	11550
	6	140	7978	6430	6940	5590	14330	11550	14330	11550
	8	140	8250	6650	7150	5760	14330	11500	14330	11550
250 SMB	2	140	6960	5610	6150	4960	11290	9100	11290	9100
	4	140	7620	6140	6680	5380	14330	11550	14330	11550
	6	140	7940	6400	6900	5560	14330	11550	14330	11550
	8	140	8180	6590	7070	5700	14330	11550	14330	11550
280 SMA	2	140	6650	5400	5850	4750	15260	12400	13790	11200
	4	140	7750	6300	6890	5600	18460	15000	16560	13450
	6	140	8810	7100	7760	6250	21090	17000	18860	15200
	8	140	9000	7250	7880	6350	21840	17600	19360	15600
280 SMB	2	140	6460	5250	5720	4650	15260	12400	13790	11200
	4	140	7510	6100	6590	5350	17850	14500	16060	13050
	8	140	8180	6590	7070	5700	14330	11550	14330	11550

Permissible axial forces

The following tables give the permissible axial forces in Newton, assuming zero radial force. The values are based on normal conditions at 50 Hz with standard bearings and calculated bearing lives of 20,000 and 40,000 hours.

At 60 Hz the values are to be reduced by 10%.

For two-speed motors, the values are to be based on the higher speed. The permissible loads of simultaneous radial and axial forces will be supplied on request.

Given axial forces F_{AD}, assumes D-bearing locked by means of locking ring.

Mounting arrangement IM B3

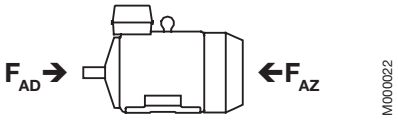

Motor size	20,000 hours								40,000 hours							
	2-pole		4-pole		6-pole		8-pole		2-pole		4-pole		6-pole		8-pole	
	F_{AD} N	F_{AZ} N	F_{AD} N	F_{AZ} N	F_{AD} N	F_{AZ} N	F_{AD} N	F_{AZ} N	F_{AD} N	F_{AZ} N	F_{AD} N	F_{AZ} N	F_{AD} N	F_{AZ} N	F_{AD} N	F_{AZ} N
56	470	230	520	280	540	300	540	300	430	190	470	230	480	240	480	240
63	790	390	865	465	-	-	895	495	720	320	780	380	-	-	895	495
71	985	485	1070	570	1135	635	1130	630	900	400	970	470	1020	520	1015	515
80	1305	705	1420	820	1505	905	1540	940	1185	585	1285	685	1350	750	1375	775
90	1360	930	1490	1070	1590	1165	1635	1210	1225	800	1335	915	1415	990	1450	1025
100	2805	1945	3075	2215	3260	2400	3355	2495	2540	1680	2760	1900	2910	2050	2985	2125
112 M	1500	1500	1600	1600	1730	1730	1750	1750	1320	1320	1390	1390	1500	1500	1510	1510
112 MB	1530	1530	1600	1600	1720	1720	1760	1760	1340	1340	1390	1390	1490	1490	1520	1520
132 SA	2570	2570	-	-	-	-	-	-	2260	2260	-	-	-	-	-	-
132 SB	2570	2570	-	-	-	-	-	-	2260	2260	-	-	-	-	-	-
132 SC	2520	2520	-	-	-	-	-	-	2210	2210	-	-	-	-	-	-
132 S	-	-	2770	2770	2950	2950	3040	3040	-	-	2440	2440	2580	2580	2650	2650
132 M	-	-	2750	2750	-	-	3020	3020	-	-	2420	2420	-	-	2630	2630
132 MA	-	-	-	-	2940	2940	-	-	-	-	-	-	2570	2570	-	-
132 MB	-	-	2680	2680	2910	2910	2940	2940	-	-	2340	2340	2550	2550	2560	2560
132 MC	-	-	-	-	2830	2830	-	-	-	-	-	-	2460	2460		
160 MA	4730	4730	-	-	-	-	5240	5240	4220	4220	-	-	-	-	4640	4640
160 M	4730	4730	5230	5230	5220	5220	5220	5220	4220	4220	4640	4640	4630	4630	4630	4630
160 L	5240	5240	5220	5220	5050	5050	4720	4720	4650	4650	4630	4630	4470	4470	4740	4740
160 LB	5240	5240	5050	5050	4720	4720	4720	4720	4650	4650	4470	4470	4740	4740	4740	4740
180 M	4660	4660	4950	4950	-	-	-	-	4250	4250	4500	4500	-	-	-	-
180 L	-	-	4870	4870	5200	5200	5370	5370	-	-	4390	4390	4710	4710	4850	4850
180 LB	4660	4660	4870	4870	5200	5200	5370	5370	4250	4250	4390	4390	4710	4710	4850	4850
200 MLA	3050	3050	3850	3850	4400	4400	4850	4850	2430	2430	3050	3050	3500	3500	3850	3850
200 MLB	3050	3050	3850	3850	4400	4400	4850	4850	2430	2430	3050	3050	3500	3500	3850	3850
200 MLC	3050	3050	-	-	4400	4400	-	-	2430	2430	-	-	3500	3500	-	-
225 SMA	-	-	4340	4340	-	-	5460	5460	-	-	3440	3440	-	-	4340	4340
225 SMB	3440	3440	4340	4340	4960	4960	5460	5460	2730	2730	3440	3440	3940	3940	4340	4340
225 SMC	3440	3440	4340	4340	4960	4960	5460	5460	2730	2730	3440	3440	3940	3940	4340	4340
250 SMA	4180	4180	5260	5260	6020	6020	6630	6630	3320	3320	4180	4180	4780	4780	5260	5260
250 SMB	4180	4180	5260	5260	6020	6020	6630	6630	3320	3320	4180	4180	4780	4780	5260	5260
280 SMA	5000	5000	6200	6200	7100	7100	7350	7350	4500	4500	5400	5400	6250	6250	6500	6500
280 SMB	5000	5000	6100	6100	-	-	-	-	4400	4400	5300	5300	-	-	-	-

Permissible axial forces

Mounting arrangement IM V1

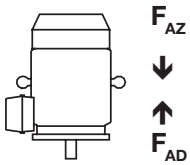

Motor size	20,000 hours								40,000 hours							
	2-pole		4-pole		6-pole		8-pole		2-pole		4-pole		6-pole		8-pole	
	F_{AD} N	F_{AZ} N	F_{AD} N	F_{AZ} N	F_{AD} N	F_{AZ} N	F_{AD} N	F_{AZ} N	F_{AD} N	F_{AZ} N	F_{AD} N	F_{AZ} N	F_{AD} N	F_{AZ} N	F_{AD} N	F_{AZ} N
56	470	230	520	270	540	290	540	290	430	190	470	230	480	240	480	240
63	790	380	875	455	-	-	905	485	725	310	790	370	-	-	810	390
71	998	470	1085	555	1150	620	1145	615	910	385	985	455	1035	505	1030	500
80	1320	685	1445	790	1530	880	1565	915	1200	565	1310	655	1375	725	1400	750
90	1390	900	1525	1035	1625	1130	1670	1180	1255	770	1370	880	1450	955	1485	990
100	2855	1890	3135	2155	3320	2340	3420	2425	2590	1625	2820	1840	2970	1990	3050	2060
112 M	2290	2170	2490	2330	2680	2510	2770	2590	2030	1910	2190	2030	2350	2180	2410	2230
112 MB	2340	2170	2520	2300	2700	2480	2790	2570	2080	1910	2220	2000	2360	2140	2430	2210
132 SA	3550	3370	-	-	-	-	-	-	3160	2980	-	-	-	-	-	-
132 SB	3560	3360	-	-	-	-	-	-	3170	2970	-	-	-	-	-	-
132 SC	3550	3270	-	-	-	-	-	-	3160	2880	-	-	-	-	-	-
132 S	-	-	3910	3630	4160	3880	4320	3990	-	-	3460	3180	3660	3380	3780	3450
132 M	-	-	3910	3590	-	-	4330	3930	-	-	3450	3130	-	-	3790	3390
132 MA	-	-	-	-	4180	3850	-	-	-	-	-	-	3670	3340	-	-
132 MB	-	-	3880	3460	4180	3780	4260	3840	-	-	3430	3010	3680	3280	3730	3310
132 MC	-	-	-	-	4110	3690	-	-	-	-	-	-	3610	3190	-	-
160 MA	4940	4520	-	-	-	-	5520	4960	4430	4010	-	-	-	-	4920	4360
160 M	4960	4500	5500	4960	5540	4900	5540	4900	4450	3990	4910	4370	4950	4310	4950	4310
160 L	5520	4960	5560	4880	5420	4680	5170	4280	4930	4370	4970	4290	4840	4100	5190	4300
160 LB	5540	4940	5420	4680	5170	4280	5170	4280	4950	4350	4840	4100	5190	4300	5190	4300
180 M	4990	4330	5400	4500	-	-	-	-	4580	3920	4950	4050	-	-	-	-
180 L	-	-	5390	4350	5770	4630	5930	4810	-	-	4910	3870	5280	4140	5410	4290
180 LB	5040	4280	5470	4270	5810	4590	5980	4760	4630	3870	4990	3790	5320	4100	5460	4240
200 MLA	3600	2500	4580	3120	5280	3530	5720	3980	2970	1870	3780	2320	4370	2620	4720	2980
200 MLB	3600	2500	4580	3120	5280	3530	5720	3980	2970	1870	3780	2320	4370	2620	4720	2980
200 MLC	3600	2500	-	-	5280	3530	-	-	2970	1870	-	-	4370	2620	-	-
225 SMA	-	-	5230	3440	-	-	6530	4400	-	-	4330	2550	-	-	5400	3270
225 SMB	4140	2740	5230	3440	6030	3900	6530	4400	3430	2030	4330	2550	5010	2870	5400	3270
225 SMC	4140	2740	5230	3440	6030	3900	6530	4400	3430	2030	4330	2550	5010	2870	5400	3270
250 SMA	5020	3330	6380	4150	7440	4610	8050	5210	4160	2470	5290	3060	6200	3360	6680	3840
250 SMB	5020	3330	6380	4150	7440	4610	8050	5210	4160	2470	5290	3060	6200	3360	6680	3840
280 SMA	5950	4050	7380	5010	8540	5660	8810	5890	5450	3550	6580	4210	7690	4810	7960	5040
280 SMB	5950	4050	7380	5010	-	-	-	-	5450	3550	6580	4210	-	-	-	-

Rating plates

Single-speed motors of size 56 to 132 are stamped with 50 and 60 Hz at voltage code S and D. The current rating for each voltage range is specified on the rating plate. It represents the highest current that can exist within the voltage range at the rated output. The power factor and speed specified on the rating plate apply at 400 V 50 Hz and 460 V 60 Hz.

Single-speed motors of size 160 to 280 are stamped with 50 and 60 Hz at voltage code S and D. The rating plate is arranged in the form of a table with values for current, power factor and motor speed at six voltages.

Motor sizes 56 to 71

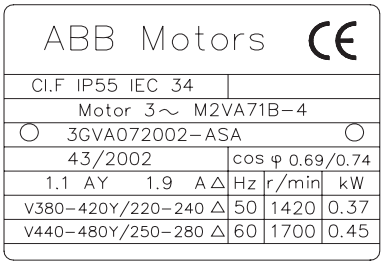

M000024

Motor sizes 80

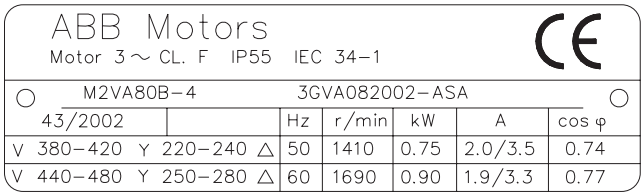

M000025

Motor sizes 90 to 100

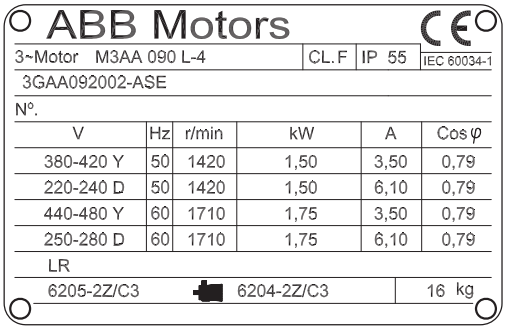

M000052

Motor sizes 112 to 132

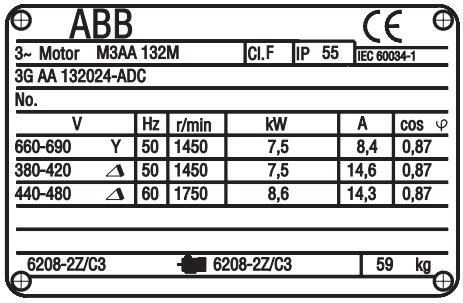

M000053

Motor sizes 160 to 280

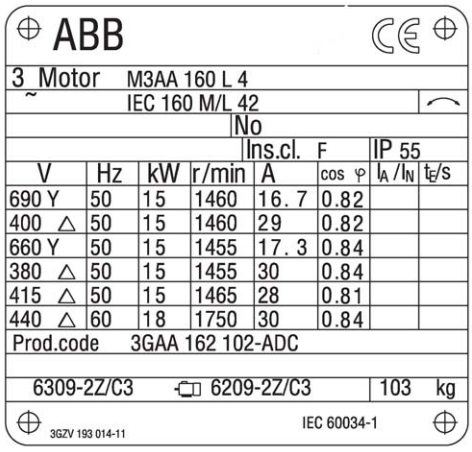

M000054

Ordering information

When placing an order, please state the following minimum data in the order, as in the example on the right.

The product code of the motor is composed in accordance with the following example.

Motor type	M3AA 112 MB
Pole number	4
Mounting arrangement (IM-code)	IM B3 (IM 1001)
Rated output	5.5 kW
Product code	3GAA 112002-ACD
Variant codes if needed	

Motor size

A	B	C	D, E, F
M3AA	112 MB	3GAA 112 002 -	ADC, 122, 043, etc.

1 2 3 4 5 6 7 8 9 10 11 12 13 14...

A Motor type
B Motor size
C Product code
D Code for mounting arrangement
E Voltage and frequency code
F Generation code followed by variant codes

Explanation of the product code

Positions 1 to 4
3GAA/3GVA = Totally enclosed fan cooled squirrel cage motor with aluminum stator frame

Position 4
Type of rotor
A = Squirrel cage rotor

Positions 5 and 6
IEC size

05 = 56
06 = 63
07 = 71
08 = 80
09 = 90
10 = 100
11 = 112
13 = 132
16 = 160
18 = 180
20 = 200
22 = 225
25 = 250
28 = 280

Position 7
Pole pairs
1 = 2 poles
2 = 4 poles
3 = 6 poles
4 = 8 poles
5 = 10 poles
6 = 12 poles
7 = > 12 poles
8 = Two-speed motors
9 = Multi-speed motors

Positions 8 to 10
Running number

Position 11
- (dash)

Position 12
Mounting arrangement
A = Foot-mounted motor
B = Flange-mounted motor. Large flange with clearance holes.
C = Flange-mounted motor. Small flange with tapped holes.
F = Foot- and flange-mounted motor. Special flange.
H = Foot-and flange-mounted motor. Large flange with clearance holes.
J = Foot- and flange-mounted motor. Small flange with tapped holes.
N = Flange-mounted (CI ring flange FF)
P = Foot and flange-mounted motor (CI ring flange FF)
V = Flange-mounted motor. Special flange.

Position 13
Voltage and frequency: See tables below

Position 14
Version **A,B,C...** =
Generation code followed by variant codes

Code letters for supplementing the product code - single speed motors

Motor size	Code letter for voltage and frequency Direct start or, with Δ-connection, also Y/Δ-start S 50 Hz	S 60 Hz	D 50 Hz	D 60 Hz	H 50 Hz	E 50 Hz	F 50 Hz	T 50 Hz	U 50 Hz	X
56-100	220-240 VΔ 380-420 VY	440-480 VY	380-420 VΔ 660-690 VY	440-480 VΔ -	-	500 VΔ[1])	500 VY	660 VΔ[1])	690 VΔ[1])	Other rated voltage, connection or frequency, 690 V maximum
112-132	220-240 VΔ 380-420 VY	- 440-480 VY	380-420 VΔ 660-690 VY	440-480 VΔ -	415 VΔ	500 VΔ	500 VY	660 VΔ	690 VΔ	
M2AA 160-250	230 VΔ 400 VY	- -	400 VΔ 690 VY	- -	-	500VΔ	-	-	-	
M3AA 160-280	220, 230 VΔ 380,400,415 VY	-	380,400,415VΔ 440 VY	440 VΔ 660, 690 VY	415 VΔ -	500 VΔ	500 VY	660 VΔ	690 VΔ	

[1]) On request.

Code letters for supplementing the product code - two-speed motors

Motor size	Code letter for voltage and frequency A	S	B	D	H	E	X
56-100	-	220-230 V	-	380-400 V	400-415 V	500 V	Other rated voltage or frequency, 690 V maximum
112-132	-	220-230 V	-	380-400 V	400-415 V	500 V	
160-280	220 V	230 V	380 V	400 V	415 V	500 V	

Marine aluminum motors

Technical data, Non-Essential/Essential Services

IP 55 - IC 411 - temperature rise 90 K

Output kW	Motor type		Product code		Speed r/min	Effi-ciency %	Power factor cos φ	Current I_N A	Current I_s / I_N	Torque T_N Nm	Torque T_s / T_N	Torque T_{max} / T_N
3000 r/min = 2 poles					**380 V 50 Hz**				**Basic design**			
0.09	**M2VA**	**56 A**	3GVA	051 001-••A	2805	58.6	0.72	0.32	3.8	0.31	2.7	2.5
0.12	**M2VA**	**56 B**	3GVA	051 002-••A	2825	69.2	0.68	0.4	4.1	0.41	2.8	2.4
0.18	**M2VA**	**63 A**	3GVA	061 001-••A	2815	74.6	0.69	0.53	3.9	0.62	2.9	2.5
0.25	**M2VA**	**63 B**	3GVA	061 002-••A	2800	78.5	0.75	0.64	4.4	0.87	3.3	3.0
0.37	**M2VA**	**71 A**	3GVA	071 001-••C	2830	77.3	0.75	1	5.4	1.25	3.4	3.5
0.55	**M2VA**	**71 B**	3GVA	071 002-••C	2820	80.2	0.81	1.31	5.5	1.86	3.3	3.4
0.75	**M2VA**	**80 A**	3GVA	081 001-••B	2850	82.2	0.80	1.73	6.1	2.51	2.7	3.4
1.1	**M2VA**	**80 B**	3GVA	081 002-••B	2830	81.1	0.84	2.47	5.9	3.72	2.2	3.4
1.5	**M3AA**	**90 S**	3GAA	091 001-••E	2850	79.7	0.88	3.4	5.9	5.03	2.1	2.7
2.2	**M3AA**	**90 L**	3GAA	091 002-••E	2860	81.8	0.89	4.6	6.5	7.37	2.2	2.8
3.2	**M3AA**	**100 L**	3GAA	101 001-••E	2880	86.0	0.90	6.3	7.2	10.61	2.2	3.3
4	**M2AA**	**112 M**	3GAA	111 001-••A	2840	83.9	0.91	7.9	6.3	13.4	2.2	2.7
4	**M3AA**	**112 M**	3GAA	111 022-••C	2860	86.7	0.93	7.6	6.7	13.4	2.3	3.0
5.5	**M2AA**	**132 SA**	3GAA	131 001-••A	2830	84.5	0.92	10.9	7.0	18.6	2.9	3.0
5.5	**M3AA**	**132 SA**	3GAA	131 023-••C	2900	88.9	0.88	10.7	9.1	18.1	3.5	4.1
7.5	**M2AA**	**132 SB**	3GAA	131 002-••A	2830	85.1	0.92	14.7	7.1	25.3	2.9	3.2
7.5	**M3AA**	**132 SB**	3GAA	131 024-••C	2915	90.5	0.90	13.8	10.0	24.6	4.6	4.6
11	**M2AA**	**160 MA**	3GAA	161 111-••A	2905	87.9	0.90	21.5	5.5	36.2	1.8	2.2
11	**M3AA**	**160 MA**	3GAA	161 101-••C	2915	90.8	0.89	20.5	5.7	36	1.9	2.5
15	**M2AA**	**160 M**	3GAA	161 112-••A	2890	88.9	0.91	28.5	5.4	49.6	2.1	2.3
15	**M3AA**	**160 M**	3GAA	161 102-••C	2905	91.0	0.90	27.5	5.8	49	2.1	2.4
18.5	**M2AA**	**160 L**	3GAA	161 113-••A	2905	89.2	0.91	34.5	6.1	61	2.3	2.7
18.5	**M3AA**	**160 L**	3GAA	161 103-••C	2910	92.0	0.91	33.5	6.5	61	2.4	2.6
22	**M2AA**	**180 M**	3GAA	181 111-••A	2915	90.5	0.91	40.5	7.2	72	2.5	3.0
22	**M3AA**	**180 M**	3GAA	181 101-••C	2930	92.4	0.90	40.5	6.5	71	2.4	2.7
30	**M2AA**	**200 LA**	3GAA	201 011-••A	2940	91.4	0.89	56	7.2	97	2.7	3.3
30	**M3AA**	**200 MLA**	3GAA	201 001-••C	2955	93.0	0.89	55	7.7	97	2.6	2.8
37	**M2AA**	**200 L**	3GAA	201 012-••A	2940	92.3	0.91	67	8.7	120	3.4	3.9
37	**M3AA**	**200 MLB**	3GAA	201 002-••C	2950	93.4	0.89	68	6.4	120	2.0	2.6
45	**M2AA**	**225 M**	3GAA	221 011-••A	2940	93.2	0.89	83	7.5	146	2.7	3.1
45	**M3AA**	**225 SMB**	3GAA	221 001-••C	2955	94.0	0.89	82	7.0	145	2.3	2.6
55	**M2AA**	**250 M**	3GAA	251 011-••A	2955	93.9	0.90	100	7.0	178	2.5	2.8
55	**M3AA**	**250 SMA**	3GAA	251 001-••C	2960	94.1	0.89	100	7.1	177	2.1	2.7
75	**M3AA**	**280 SMA**	3GAA	281 001-••C	2965	94.6	0.90	134	7.4	242	2.5	2.8
86	**M3AA**	**280 SMB**	3GAA	281 002-••C	2965	95.1	0.91	152	8.0	277	2.5	3.2
3000 r/min = 2 poles					**380 V 50 Hz**				**High-output design**			
0.37	**M2VA**	**63 BB**	3GVA	061 003-••A	2790	71.6	0.84	0.92	3.3	1.29	2.0	1.9
0.68	**M2VA**	**71 BB**	3GVA	071 003-••C	2790	77.4	0.85	1.6	5.0	2.33	2.9	3.0
0.75	**M2VA**	**71 BC**	3GVA	071 004-••C	2790	76.0	0.87	1.75	4.9	2.57	2.8	2.9
1.5	**M2VA**	**80 C**	3GVA	081 003-••B	2760	80.9	0.88	3.2	5.3	5.19	2.6	2.9
2.5	**M3AA**	**90 LB**	3GAA	091 003-••E	2855	80.2	0.84	5.4	7.2	8.4	2.5	2.9
4	**M3AA**	**100 LB**	3GAA	101 002-••E	2890	85.0	0.86	8.3	6.8	13.1	2.4	3.2
5.5	**M3AA**	**112 MB**	3GAA	111 002-••C	2835	85.5	0.93	10.5	6.6	18.4	2.3	3.1
9.5	**M3AA**	**132 SC**	3GAA	131 003-••C	2855	87.5	0.94	17.6	8.8	31.8	3.6	3.5
21	**M3AA**	**160 LB**	3GAA	161 104-••C	2915	91.3	0.92	38	6.5	69	2.2	2.8
30	**M3AA**	**180 LB**	3GAA	181 102-••C	2940	93.9	0.90	55	7.1	97	2.4	2.8
45	**M3AA**	**200 MLC**	3GAA	201 003-••C	2945	94.0	0.89	82	7.5	146	2.8	3.0
49	**M3AA**	**200 MLD**	3GAA	201 004-••C	2940	94.0	0.90	89	8.1	159	3.1	3.1
55	**M3AA**	**225 SMC**	3GAA	221 002-••C	2950	94.3	0.89	100	6.7	177	2.5	2.7
73	**M3AA**	**225 SMD**	3GAA	221 003-••C	2960	95.0	0.88	134	7.5	236	2.8	3.1
75	**M3AA**	**250 SMB**	3GAA	251 002-••C	2965	94.6	0.90	134	7.4	242	2.5	2.8
86	**M3AA**	**250 SMC**	3GAA	251 003-••C	2965	95.1	0.91	152	8.0	277	2.5	3.2

The bullets in the product code indicate choice of mounting arrangement, voltage and frequency, generation code (see ordering information page).

Marine aluminum motors

Technical data, Non-Essential/Essential Services

IP 55 - IC 411 - temperature rise 90 K

Output kW	Motor type		Speed r/min	Effi-ciency %	Power factor cos φ	Current I_N A	Current I_s / I_N	Torque T_N Nm	Torque T_s / T_N	Torque T_{max} / T_N	Moment of inertia J=1/4 GD² kgm²	Weight kg
3600 r/min = 2 poles			**440 V 60 Hz**					**Basic design**				
0.1	**M2VA**	**56 A**	3385	58.8	0.70	0.32	3.9	0.28	2.7	2.5	0.00011	3.2
0.14	**M2VA**	**56 B**	3405	68.2	0.66	0.41	4.1	0.39	2.8	2.4	0.00012	3.4
0.22	**M2VA**	**63 A**	3385	73.8	0.70	0.56	4.2	0.62	2.9	2.5	0.00013	3.9
0.32	**M2VA**	**63 B**	3375	80.6	0.78	0.67	4.5	0.9	2.9	2.6	0.00016	4.4
0.5	**M2VA**	**71 A**	3405	81.3	0.77	1.05	5.5	1.4	2.9	3.0	0.0004	5.5
0.75	**M2VA**	**71 B**	3395	82.1	0.80	1.5	5.7	2.11	2.7	2.8	0.00045	6.5
1	**M2VA**	**80 A**	3445	78.2	0.84	2	6.2	2.77	2.2	2.9	0.000722	9
1.3	**M2VA**	**80 B**	3420	83.3	0.82	2.5	6.1	3.63	2.0	3.2	0.000763	11
1.75	**M3AA**	**90 S**	3420	79.7	0.88	3.4	5.9	4.6	2.1	2.7	0.0019	13
2.5	**M3AA**	**90 L**	3420	81.8	0.89	4.7	6.5	6.6	2.2	2.7	0.0024	16
3.7	**M3AA**	**100 L**	3455	86.0	0.90	6.3	7.2	9.8	2.2	3.2	0.0041	21
4.6	**M2AA**	**112 M**	3440	85.8	0.93	7.6	6.6	12.8	2.2	2.7	0.01	25
4.6	**M3AA**	**112 M**	3460	88.1	0.93	7.4	7.0	12.8	2.2	3.2	0.012	33
6.4	**M2AA**	**132 SA**	3430	85.7	0.92	10.8	7.0	17.8	2.9	3.0	0.014	37
6.4	**M3AA**	**132 SA**	3500	90.0	0.87	10.7	9.2	17.5	3.2	4.2	0.016	42
8.6	**M2AA**	**132 SB**	3430	86.5	0.92	14.6	7.1	23.9	2.9	3.2	0.016	42
8.6	**M3AA**	**132 SB**	3515	91.5	0.89	13.8	10.3	23.4	4.2	4.8	0.022	56
13	**M2AA**	**160 MA**	3500	89.2	0.91	21.5	5.5	35.5	1.7	2.2	0.039	73
14.5	**M3AA**	**160 MA**	3485	91.0	0.90	24	5.0	39.7	1.7	2.2	0.039	73
17.5	**M2AA**	**160 M**	3485	90.1	0.90	27.5	5.5	48	2.0	2.3	0.047	84
17.5	**M3AA**	**160 M**	3505	91.4	0.91	28.5	5.8	48	2.0	2.4	0.047	84
21	**M2AA**	**160 L**	3505	90.5	0.91	34	6.3	57	2.2	2.7	0.053	94
21	**M3AA**	**160 L**	3510	92.3	0.92	33.5	6.7	57	2.3	2.6	0.053	94
25.5	**M2AA**	**180 M**	3515	91.6	0.91	40.5	7.3	69	2.3	3.0	0.06	108
26.5	**M3AA**	**180 M**	3520	92.1	0.90	42.5	6.3	72	2.2	2.6	0.077	119
35	**M2AA**	**200 LA**	3540	92.3	0.90	56	7.2	94	2.5	3.2	0.094	148
35	**M3AA**	**200 MLA**	3555	93.1	0.89	55	7.7	94	2.3	2.7	0.15	175
42	**M2AA**	**200 L**	3540	93.1	0.91	66	7.7	113	2.8	3.3	0.115	180
43	**M3AA**	**200 MLB**	3550	93.4	0.90	67	6.4	116	1.9	2.5	0.18	200
53	**M2AA**	**225 M**	3540	94.1	0.89	83	7.4	143	2.4	3.0	0.21	230
54	**M3AA**	**225 SMB**	3555	94.1	0.89	86	6.8	145	2.0	2.5	0.26	235
63	**M2AA**	**250 M**	3555	94.5	0.90	102	7.1	169	2.4	2.7	0.31	276
65	**M3AA**	**250 SMA**	3555	94.3	0.91	101	6.9	175	1.9	2.6	0.49	285
86	**M3AA**	**280 SMA**	3565	95.1	0.90	134	7.4	230	2.2	2.8	0.57	330
99	**M3AA**	**280 SMB**	3565	95.1	0.91	152	8.0	265	2.3	3.1	0.59	345
3600 r/min = 2 poles			**440 V 60 Hz**					**High-output design**				
0.45	**M2VA**	**63 BB**	3360	76.4	0.86	0.9	3.5	1.28	2.0	1.9	0.00036	4.9
0.82	**M2VA**	**71 BB**	3360	79.6	0.82	1.65	5.2	2.33	2.7	2.8	0.00045	6.5
0.9	**M2VA**	**71 BC**	3360	77.7	0.80	1.9	5.1	2.56	2.6	2.7	0.00045	6.5
1.6	**M2VA**	**80 C**	3360	81.4	0.89	2.9	5.5	4.55	2.6	2.9	0.001093	11
2.9	**M3AA**	**90 LB**	3425	80.2	0.84	5.4	7.2	8.4	2.5	2.9	0.0027	18
4.6	**M3AA**	**100 LB**	3460	85.0	0.85	8.3	6.8	13.1	2.4	3.2	0.005	25
6.4	**M3AA**	**112 MB**	3455	86.8	0.93	10.4	6.8	17.8	2.1	3.3	0.012	33
11	**M3AA**	**132 SC**	3455	89.0	0.93	17.5	9.1	30.4	3.8	3.4	0.022	56
24	**M3AA**	**160 LB**	3515	92.5	0.92	38	6.7	65	2.1	2.8	0.058	100
35.6	**M3AA**	**180 LB**	3540	93.6	0.91	56	6.9	96	2.2	2.6	0.092	137
52	**M3AA**	**200 MLC**	3545	94.3	0.89	82	7.6	140	2.5	2.9	0.19	205
57	**M3AA**	**200 MLD**	3540	94.0	0.90	89	8.1	154	2.8	3.0	0.2	215
65	**M3AA**	**225 SMC**	3550	94.5	0.90	103	6.6	174	2.3	2.6	0.29	260
85	**M3AA**	**225 SMD**	3560	95.0	0.88	134	7.5	228	2.6	2.9	0.3	275
86	**M3AA**	**250 SMB**	3565	95.1	0.90	134	7.4	230	2.2	2.8	0.57	330
99	**M3AA**	**250 SMC**	3565	95.3	0.91	152	8.0	265	2.3	3.1	0.59	345

Marine aluminum motors

Technical data, Non-Essential/Essential Services

IP 55 - IC 411 - temperature rise 90 K

Output kW	Motor type		Product code		Speed r/min	Effi-ciency %	Power factor cos φ	Current I_N A	Current I_s / I_N	Torque T_N Nm	Torque T_s / T_N	Torque T_{max} / T_N
1500 r/min = 4 poles					**380 V 50 Hz**				**Basic design**			
0.06	**M2VA**	**56 A**	3GVA	052 001-••A	1335	50.5	0.70	0.26	2.4	0.43	2.0	2.0
0.09	**M2VA**	**56 B**	3GVA	052 002-••A	1360	57.1	0.66	0.37	2.7	0.63	2.6	2.6
0.12	**M2VA**	**63 A**	3GVA	062 001-••A	1390	63.1	0.63	0.44	3.0	0.82	2.5	2.5
0.18	**M2VA**	**63 B**	3GVA	062 002-••A	1370	66.9	0.67	0.63	3.0	1.25	2.2	2.2
0.25	**M2VA**	**71 A**	3GVA	072 001-••C	1400	69.9	0.74	0.75	4.0	1.71	2.5	2.7
0.37	**M2VA**	**71 B**	3GVA	072 002-••C	1410	74.6	0.73	1.02	4.2	2.51	2.4	2.6
0.55	**M2VA**	**80 A**	3GVA	082 001-••B	1370	75.5	0.82	1.35	4.5	3.84	2.4	2.8
0.75	**M2VA**	**80 B**	3GVA	082 002-••B	1390	78.7	0.81	1.8	4.8	5.16	3.1	3.6
0.75	**M2VA**	**80 B**	3GVA	082 002-••B	1390	78.7	0.81	1.8	4.8	5.16	3.1	3.6
1.1	**M3AA**	**90 S**	3GAA	092 001-••E	1410	76.3	0.83	2.66	4.6	7.45	2.0	2.5
1.5	**M3AA**	**90 L**	3GAA	092 002-••E	1420	79.9	0.82	3.5	5.2	10.09	2.1	2.6
2.2	**M3AA**	**100 LA**	3GAA	102 001-••E	1430	83.0	0.83	4.83	5.8	14.69	2.1	3.0
3	**M3AA**	**100 LB**	3GAA	102 002-••E	1430	85.0	0.85	6.58	5.7	20.03	2.2	2.6
3	**M3AA**	**112 MA**	3GAA	112 021-••C	1450	87.4	0.81	6.5	7.1	19.8	2.4	3.3
4	**M2AA**	**112 M**	3GAA	112 001-••A	1425	84.0	0.84	8.9	6.3	27	2.3	2.8
4	**M3AA**	**112 M**	3GAA	112 022-••C	1450	88.6	0.79	9	7.9	26.3	3.0	3.9
5.5	**M2AA**	**132 S**	3GAA	132 001-••A	1445	86.0	0.85	11.5	7.2	36	2.2	2.7
5.5	**M3AA**	**132 S**	3GAA	132 023-••C	1460	89.2	0.84	11	6.7	36	2.0	3.0
7.5	**M2AA**	**132 M**	3GAA	132 002-••A	1445	87.0	0.85	15.5	7.5	50	2.4	2.9
7.5	**M3AA**	**132 M**	3GAA	132 024-••C	1450	90.1	0.87	14.7	7.6	49	2.9	2.8
11	**M2AA**	**160 M**	3GAA	162 111-••A	1445	88.2	0.83	23	6.0	72	2.4	2.3
11	**M3AA**	**160 M**	3GAA	162 101-••C	1460	91.1	0.83	22.5	7.1	72	2.9	3.1
15	**M2AA**	**160 L**	3GAA	162 112-••A	1455	89.5	0.84	30.5	6.6	98	2.5	2.5
15	**M3AA**	**160 L**	3GAA	162 102-••C	1455	91.8	0.84	30	7.4	98	2.7	3.1
18.5	**M2AA**	**180 M**	3GAA	182 111-••A	1455	90.5	0.83	37.5	7.0	121	2.7	3.1
18.5	**M3AA**	**180 M**	3GAA	182 101-••C	1465	91.7	0.85	36	6.3	120	2.6	2.6
22	**M2AA**	**180 L**	3GAA	182 112-••A	1460	90.9	0.84	43.5	7.4	144	3.0	3.0
22	**M3AA**	**180 L**	3GAA	182 102-••C	1465	92.7	0.86	42	6.5	143	2.6	2.8
30	**M2AA**	**200 L**	3GAA	202 011-••A	1470	92.3	0.82	60	7.2	195	2.5	3.2
30	**M3AA**	**200 MLB**	3GAA	202 001-••C	1470	93.1	0.85	58	6.9	195	2.3	2.5
37	**M2AA**	**225 S**	3GAA	222 011-••A	1470	92.4	0.86	71	6.1	241	2.6	2.7
37	**M3AA**	**225 SMA**	3GAA	222 001-••C	1475	93.6	0.84	72	6.9	239	2.9	3.0
45	**M2AA**	**225 M**	3GAA	222 012-••A	1470	93.2	0.85	87	7.4	292	3.2	2.8
45	**M3AA**	**225 SMB**	3GAA	222 002-••C	1475	94.0	0.85	86	6.9	291	3.0	2.7
55	**M2AA**	**250 M**	3GAA	252 011-••A	1470	93.3	0.86	103	6.1	358	2.2	2.3
55	**M3AA**	**250 SMA**	3GAA	252 001-••C	1475	94.4	0.86	103	7.0	356	2.7	2.8
75	**M3AA**	**280 SMA**	3GAA	282 001-••C	1475	94.5	0.87	139	6.4	486	2.8	2.7
88	**M3AA**	**280 SMB**	3GAA	282 002-••C	1475	95.1	0.89	160	7.4	571	2.8	2.7
1500 r/min = 4 poles					**380 V 50 Hz**				**High-output design**			
0.25	**M2VA**	**63 BB**	3GVA	062 003-••A	1360	70.9	0.71	0.76	3.1	1.75	2.2	1.8
0.45	**M2VA**	**71 BB**	3GVA	072 003-••C	1380	75.1	0.80	1.12	3.9	3.11	1.9	2.1
0.55	**M2VA**	**71 C**	3GVA	072 004-••C	1400	77.0	0.77	1.4	4.6	3.74	2.4	2.6
0.95	**M2VA**	**80 C**	3GVA	082 003-••B	1410	79.1	0.81	2.3	4.6	6.45	2.9	3.2
1.85	**M3AA**	**90 L**	3GAA	092 003-••E	1380	78.8	0.80	4.4	4.1	13	2.0	2.2
2.2	**M3AA**	**90 LB**	3GAA	092 004-••E	1380	78.4	0.85	5.1	4.1	15.2	2.0	2.2
3.75	**M3AA**	**100 LC**	3GAA	102 003-••E	1415	79.0	0.78	8.3	5.3	25.3	2.3	2.5
4.9	**M3AA**	**112 MB**	3GAA	112 002-••C	1430	85.9	0.85	10.3	7.4	33	2.8	3.2
9.5	**M3AA**	**132 MB**	3GAA	132 003-••C	1455	88.4	0.86	19	8.0	62	2.3	2.8
17.5	**M3AA**	**160 LB**	3GAA	162 103-••C	1450	90.7	0.84	35	6.2	115	2.5	2.9
28	**M3AA**	**180 LB**	3GAA	182 103-••C	1465	92.5	0.85	55	6.6	182	2.4	2.7
37	**M3AA**	**200 MLB**	3GAA	202 002-••C	1475	93.3	0.85	71	7.2	241	3.5	2.8
44	**M3AA**	**200 MLC**	3GAA	202 003-••C	1470	94.1	0.85	85	8.1	285	4.1	3.3
55	**M3AA**	**225 SMC**	3GAA	222 003-••C	1475	94.3	0.84	105	6.8	357	3.1	2.7
67	**M3AA**	**225 SMD**	3GAA	222 004-••C	1475	94.5	0.87	125	8.1	434	3.9	3.1
75	**M3AA**	**250 SMB**	3GAA	252 002-••C	1475	94.5	0.87	139	6.4	486	2.8	2.7
88	**M3AA**	**250 SMC**	3GAA	252 003-••C	1475	95.0	0.89	160	7.5	570	2.8	2.7

The bullets in the product code indicate choice of mounting arrangement, voltage and frequency, generation code (see ordering information page).

Marine aluminum motors

Technical data, Non-Essential/Essential Services

IP 55 - IC 411 - temperature rise 90 K

Output kW	Motor type		Speed r/min	Effi-ciency %	Power factor cos φ	Current I_N A	Current I_s / I_N	Torque T_N Nm	Torque T_s / T_N	Torque T_{max} / T_N	Moment of inertia J=1/4 GD² kgm²	Weight kg
1800 r/min = 4 poles			**440 V 60 Hz**					**Basic design**				
0.075	**M2VA**	**56 A**	1605	53.0	0.68	0.29	2.5	0.44	1.9	1.9	0.00017	3.2
0.1	**M2VA**	**56 B**	1645	52.9	0.64	0.39	2.8	0.58	2.3	2.3	0.00018	3.4
0.14	**M2VA**	**63 A**	1680	64.5	0.62	0.46	3.1	0.79	2.1	2.1	0.00019	4
0.26	**M2VA**	**63 B**	1655	68.6	0.78	0.64	3.1	1.5	1.8	1.9	0.00026	4.5
0.37	**M2VA**	**71 A**	1695	73.0	0.85	0.78	4.3	2.08	1.8	2.0	0.00066	5.5
0.5	**M2VA**	**71 B**	1705	77.0	0.75	1.13	4.4	2.8	2.0	2.2	0.00089	6.5
0.7	**M2VA**	**80 A**	1665	76.6	0.75	2.2	4.7	5.12	2.9	2.3	0.001257	9
0.9	**M2VA**	**80 B**	1680	76.9	0.70	2.2	4.7	5.12	2.9	2.3	0.001565	10
0.9	**M2VA**	**80 B**	1680	76.9	0.70	2.2	4.7	5.12	2.9	2.3	0.001565	10
1.3	**M3AA**	**90 S**	1700	79.9	0.82	2.66	4.6	9.2	2.1	2.6	0.0032	13
1.75	**M3AA**	**90 L**	1710	79.9	0.82	3.5	5.2	9.2	2.1	2.6	0.0043	16
2.5	**M3AA**	**100 LA**	1720	79.9	0.83	4.7	5.2	9.2	2.1	2.6	0.0069	21
3.5	**M3AA**	**100 LB**	1720	85.0	0.85	6.58	5.7	18.5	2.2	2.6	0.0082	24
3.5	**M3AA**	**112 MA**	1750	88.1	0.81	6.5	7.1	19.1	2.1	3.3	0.018	34
4.6	**M2AA**	**112 M**	1725	86.2	0.84	8.6	6.5	25	2.3	2.7	0.015	27
4.6	**M3AA**	**112 M**	1755	90.0	0.77	8.6	8.2	25.1	2.7	4.0	0.018	34
6.4	**M2AA**	**132 S**	1745	87.5	0.86	11.4	7.3	35	2.2	2.6	0.031	40
6.4	**M3AA**	**132 S**	1760	89.6	0.84	11	6.9	35	1.8	3.0	0.038	48
8.6	**M2AA**	**132 M**	1745	88.0	0.85	15.4	7.5	47	2.4	2.8	0.038	48
8.6	**M3AA**	**132 M**	1750	90.1	0.86	14.7	7.7	47	2.6	2.9	0.048	59
13	**M2AA**	**160 M**	1750	88.3	0.83	23	6.0	71	2.3	2.3	0.067	75
15.5	**M3AA**	**160 M**	1745	91.5	0.85	27	5.9	84	2.3	2.5	0.067	94
17.5	**M2AA**	**160 L**	1755	90.6	0.84	30.5	6.7	95	2.3	2.5	0.088	92
18	**M3AA**	**160 L**	1750	91.8	0.84	30	7.2	98	2.5	3.2	0.102	103
21	**M2AA**	**180 M**	1755	91.6	0.84	36	7.2	114	2.7	3.2	0.102	111
22	**M3AA**	**180 M**	1765	92.5	0.85	37.5	6.5	119	2.5	2.5	0.161	124
25.5	**M2AA**	**180 L**	1760	91.8	0.84	43.5	7.4	139	2.9	2.9	0.127	125
26	**M3AA**	**180 L**	1760	92.6	0.85	44	6.4	144	2.5	2.8	0.225	161
36	**M2AA**	**200 L**	1765	93.4	0.84	61	7.0	194	2.4	3.0	0.225	172
38	**M3AA**	**200 MLB**	1765	93.2	0.86	63	6.1	206	2.0	2.3	0.34	205
43	**M2AA**	**225 S**	1770	93.2	0.86	71	6.2	232	2.4	2.7	0.35	215
44	**M3AA**	**225 SMA**	1775	93.8	0.84	74	6.8	237	2.5	2.8	0.37	215
52	**M2AA**	**225 M**	1770	93.9	0.85	86	7.5	280	3.0	2.8	0.41	240
55	**M3AA**	**225 SMB**	1775	94.0	0.85	92	6.9	296	2.8	2.5	0.42	230
63	**M2AA**	**250 M**	1770	94.0	0.86	102	6.2	340	2.1	2.3	0.5	281
65	**M3AA**	**250 SMA**	1775	94.3	0.86	107	6.8	350	2.5	2.5	0.72	275
88	**M3AA**	**280 SMA**	1775	94.6	0.87	142	6.3	474	2.7	2.6	0.88	335
99	**M3AA**	**280 SMB**	1775	95.8	0.89	155	7.7	550	2.7	2.7	0.95	360
1800 r/min = 4 poles			**440 V 60 Hz**					**High-output design**				
0.3	**M2VA**	**63 BB**	1645	72.2	0.70	0.78	3.2	1.74	2.1	1.7	0.0003	5
0.55	**M2VA**	**71 BB**	1665	78.5	0.80	1.15	4.1	3.15	1.8	2.0	0.00089	6.5
0.65	**M2VA**	**71 C**	1695	78.5	0.75	1.45	4.8	3.66	2.3	2.5	0.0011	7
1.2	**M2VA**	**80 C**	1705	77.6	0.70	2.9	4.3	6.73	2.4	2.8	0.001948	11
2.2	**M3AA**	**90 L**	1660	78.8	0.79	4.4	4.1	12.7	2.0	2.2	0.0043	16
2.5	**M3AA**	**90 LB**	1655	78.4	0.85	5.1	4.1	14.1	2.4	2.6	0.0048	17
4.3	**M3AA**	**100 LC**	1710	79.0	0.78	8.3	5.3	24	2.3	2.5	0.009	25
5.7	**M3AA**	**112 MB**	1730	86.5	0.85	10.2	7.5	32	2.6	3.1	0.018	34
11	**M3AA**	**132 MB**	1755	88.3	0.85	19	8.0	60	2.2	2.7	0.048	59
20	**M3AA**	**160 LB**	1750	91.4	0.84	35	6.4	109	2.4	2.9	0.102	103
32.5	**M3AA**	**180 LB**	1765	93.2	0.85	55	6.6	176	2.3	2.7	0.225	161
42	**M3AA**	**200 MLB**	1775	93.5	0.85	71	7.4	227	3.3	2.8	0.34	205
51	**M3AA**	**200 MLC**	1770	94.1	0.85	85	7.9	275	3.6	3.1	0.38	270
65	**M3AA**	**225 SMC**	1775	94.2	0.85	109	6.7	351	2.8	2.6	0.49	265
78	**M3AA**	**225 SMD**	1775	94.5	0.87	124	8.2	420	3.6	3.1	0.56	290
88	**M3AA**	**250 SMB**	1775	94.6	0.87	142	6.3	474	2.7	2.6	0.88	335
99	**M3AA**	**250 SMC**	1775	95.0	0.89	155	7.7	550	2.7	2.7	0.95	360

Marine aluminum motors

Technical data, Non-Essential/Essential Services

IP 55 - IC 411 - temperature rise 90 K

Output kW	Motor type		Product code		Speed r/min	Effi-ciency %	Power factor cos φ	Current I_N A	Current I_s / I_N	Torque T_N Nm	Torque T_s / T_N	Torque T_{max} / T_N
1000 r/min = 6 poles					**380 V 50 Hz**				**Basic design**			
0.09	**M2VA**	**63 A**	3GVA	063 001-••A	905	49.6	0.59	0.46	2.0	0.95	1.8	1.8
0.12	**M2VA**	**63 B**	3GVA	063 002-••A	905	59.1	0.61	0.52	2.0	1.27	1.8	1.8
0.18	**M2VA**	**71 A**	3GVA	073 001-••C	910	60.3	0.73	0.62	2.7	1.88	1.9	2.0
0.25	**M2VA**	**71 B**	3GVA	073 002-••C	910	65.4	0.68	0.85	3.0	2.61	2.3	2.5
0.37	**M2VA**	**80 A**	3GVA	083 001-••B	900	72.7	0.77	1.03	3.7	3.93	2.7	3.0
0.55	**M2VA**	**80 B**	3GVA	083 002-••B	880	73.1	0.77	1.5	3.5	5.98	2.8	3.0
0.75	**M3AA**	**90 S**	3GAA	093 001-••E	920	70.6	0.72	2.3	3.9	7.79	1.7	2.0
1.1	**M3AA**	**90 L**	3GAA	093 002-••E	920	73.9	0.73	3.2	3.9	11.42	1.8	2.2
1.5	**M3AA**	**100 L**	3GAA	103 001-••E	940	79.0	0.74	3.96	4.3	15.24	1.7	2.0
2.2	**M3AA**	**112 M**	3GAA	113 001-••C	930	80.0	0.78	5.4	5.0	22	1.8	2.5
3	**M3AA**	**132 S**	3GAA	133 001-••C	955	84.0	0.77	7.1	6.0	30	1.8	2.7
4	**M3AA**	**132 MA**	3GAA	133 002-••C	955	85.0	0.81	8.9	6.5	40	2.0	2.7
5.5	**M3AA**	**132 MB**	3GAA	133 003-••C	950	85.5	0.81	12.2	6.5	55	2.5	2.5
7.5	**M3AA**	**160 M**	3GAA	163 101-••C	960	88.7	0.80	16.1	6.0	74	1.8	2.5
11	**M3AA**	**160 L**	3GAA	163 102-••C	960	89.4	0.80	23.5	6.3	109	1.9	3.1
15	**M3AA**	**180 L**	3GAA	183 101-••C	970	90.9	0.79	32	6.2	148	1.8	3.0
18.5	**M3AA**	**200 MLA**	3GAA	203 001-••C	980	90.8	0.81	38	6.4	181	2.4	2.3
22	**M3AA**	**200 MLB**	3GAA	203 002-••C	980	91.6	0.81	45	6.3	214	2.6	2.7
30	**M3AA**	**225 SMB**	3GAA	223 001-••C	985	92.6	0.83	59	6.8	291	2.9	2.6
37	**M3AA**	**250 SMA**	3GAA	253 001-••C	985	93.3	0.84	72	6.5	359	2.8	2.6
45	**M3AA**	**280 SMA**	3GAA	283 001-••C	985	93.5	0.84	87	6.5	437	2.8	2.5
1000 r/min = 6 poles					**380 V 50 Hz**				**High-output design**			
0.15	**M2VA**	**63 BB**	3GVA	063 003-••A	895	55.9	0.59	0.71	2.1	1.61	1.9	2.0
0.32	**M2VA**	**71 C**	3GVA	073 003-••C	910	65.6	0.67	1.1	3.1	3.33	2.4	2.6
1.2	**M3AA**	**90 LB**	3GAA	093 003-••E	905	68.7	0.74	3.6	3.8	12.7	1.7	2.0
2.1	**M3AA**	**100 LC**	3GAA	103 002-••E	935	75.8	0.74	5.65	4.3	21.5	1.7	2.1
2.5	**M3AA**	**112 MB**	3GAA	113 002-••C	945	81.7	0.75	6.3	6.1	25	2.8	3.0
6	**M3AA**	**132 MC**	3GAA	133 004-••C	960	85.0	0.78	13.8	7.1	60	2.2	2.8
13.5	**M3AA**	**160 LB**	3GAA	163 103-••C	965	89.8	0.77	30.5	6.8	133	2.3	2.9
16.5	**M3AA**	**180 LB**	3GAA	183 102-••C	965	91.0	0.80	35	6.2	163	2.1	2.5
30	**M3AA**	**200 MLC**	3GAA	203 003-••C	980	91.5	0.83	57	6.6	294	3.2	2.7
37	**M3AA**	**225 SMC**	3GAA	223 002-••C	980	92.7	0.83	72	6.6	361	3.2	2.5
45	**M3AA**	**250 SMB**	3GAA	253 002-••C	985	93.5	0.84	87	6.5	437	2.8	2.5

The bullets in the product code indicate choice of mounting arrangement, voltage and frequency, generation code (see ordering information page).

Marine aluminum motors

Technical data, Non-Essential/Essential Services

IP 55 - IC 411 - temperature rise 90 K

Output kW	Motor type		Speed r/min	Effi-ciency %	Power factor cos φ	Current I_N A	Current I_s / I_N	Torque T_N Nm	Torque T_s / T_N	Torque T_{max} / T_N	Moment of inertia J=1/4 GD² kgm²	Weight kg
1200 r/min = 6 poles			**440 V 60 Hz**					**Basic design**				
0.1	**M2VA**	**63 A**	1090	44.1	0.58	0.51	2.1	0.87	1.9	1.9	0.0002	4
0.14	**M2VA**	**63 B**	1090	54.9	0.59	0.57	2.1	1.22	1.9	1.9	0.00027	4.5
0.25	**M2VA**	**71 A**	1100	62.6	0.75	0.7	2.9	2.17	1.6	1.7	0.00063	5.5
0.33	**M2VA**	**71 B**	1100	68.8	0.70	0.9	3.2	2.86	1.9	2.1	0.00081	6.5
0.5	**M2VA**	**80 A**	1095	74.0	0.74	1.2	3.8	4.36	2.4	2.7	0.001842	9
0.7	**M2VA**	**80 B**	1080	72.9	0.70	1.8	3.4	6.2	2.3	2.5	0.002176	10
0.9	**M3AA**	**90 S**	1105	70.6	0.72	2.3	3.9	7.1	1.7	2.0	0.0032	13
1.3	**M3AA**	**90 L**	1105	73.9	0.73	3.2	3.9	10.3	1.7	2.0	0.0043	16
1.75	**M3AA**	**100 L**	1130	79.0	0.74	3.96	4.3	13.9	1.7	2.0	0.0082	23
2.5	**M3AA**	**112 M**	1130	82.1	0.81	5.2	5.3	21	1.7	2.7	0.015	27
3.5	**M3AA**	**132 S**	1160	85.7	0.75	7	6.1	29	1.7	2.7	0.031	39
4.6	**M3AA**	**132 MA**	1160	86.7	0.78	8.7	6.6	38	1.9	2.8	0.038	46
6.4	**M3AA**	**132 MB**	1155	87.0	0.78	12.2	6.6	53	2.2	2.6	0.045	54
9.8	**M3AA**	**160 M**	1165	88.5	0.80	18.5	5.4	81	1.5	2.1	0.089	88
13	**M3AA**	**160 L**	1170	90.1	0.79	25	6.2	107	1.7	3.0	0.307	102
17.5	**M3AA**	**180 L**	1165	91.3	0.79	33	6.2	143	1.7	2.9	0.217	151
22	**M3AA**	**200 MLA**	1180	91.4	0.82	39	6.3	179	2.2	2.2	0.37	165
26	**M3AA**	**200 MLB**	1175	92.1	0.83	45	6.3	2111	2.5	2.7	0.43	185
35	**M3AA**	**225 SMB**	1185	93.1	0.83	61	6.8	282	2.7	2.5	0.64	225
43	**M3AA**	**250 SMA**	1185	93.8	0.84	73	6.6	347	2.6	2.5	1.16	280
52	**M3AA**	**280 SMA**	1185	93.9	0.84	87	6.5	420	2.6	2.4	1.49	320
1200 r/min = 6 poles			**440 V 60 Hz**					**High-output design**				
0.18	**M2VA**	**63 BB**	1080	53.5	0.56	0.79	2.2	1.59	1.9	2.0	0.00032	5
0.43	**M2VA**	**71 C**	1100	67.2	0.70	1.2	3.2	3.73	1.9	2.1	0.0011	7
1.4	**M3AA**	**90 LB**	1105	68.6	0.73	3.6	3.8	12.1	1.7	2.0	0.0048	18
2.4	**M3AA**	**100 LC**	1120	78.8	0.72	5.65	4.3	20.5	1.7	2.1	0.009	26
2.9	**M3AA**	**112 MB**	1145	83.0	0.73	6.3	6.2	24.5	2.5	3.0	0.018	33
6.9	**M3AA**	**132 MC**	1160	86.1	0.77	13.6	7.2	57	2.1	2.9	0.049	59
15.5	**M3AA**	**160 LB**	1165	91.0	0.77	30	6.9	127	2.2	2.9	0.127	117
19	**M3AA**	**180 LB**	1165	91.9	0.80	35	6.1	155	2.0	2.5	0.237	160
34	**M3AA**	**200 MLC**	1180	92.3	0.83	57	6.9	276	3.1	2.6	0.49	200
44	**M3AA**	**225 SMC**	1180	93.2	0.83	74	6.4	357	2.9	2.4	0.75	252
52	**M3AA**	**250 SMB**	1185	93.9	0.84	87	6.5	420	2.6	2.4	1.49	320

Marine aluminum motors

Technical data, Non-Essential/Essential Services

IP 55 - IC 411 - temperature rise 90 K

Output kW	Motor type		Product code		Speed r/min	Effi-ciency %	Power factor cos φ	Current I_N A	Current I_s / I_N	Torque T_N Nm	Torque T_s / T_N	Torque T_{max} / T_N
750 r/min = 8 poles					**380 V 50 Hz**				**Basic design**			
0.055	**M2VA**	**63 B**	3GVA	064 002-••A	675	41.2	0.50	0.41	1.7	0.78	2.0	2.0
0.09	**M2VA**	**71 A**	3GVA	074 001-••C	680	46.3	0.60	0.5	2.1	1.25	2.1	2.1
0.12	**M2VA**	**71 B**	3GVA	074 002-••C	680	47.7	0.59	0.65	2.1	1.67	2.3	2.3
0.18	**M2VA**	**80 A**	3GVA	084 001-••B	690	61.1	0.64	0.7	3.1	2.49	2.9	3.3
0.25	**M2VA**	**80 B**	3GVA	084 002-••B	675	70.2	0.66	0.84	2.9	3.55	2.7	2.9
0.37	**M3AA**	**90 S**	3GAA	094 001-••E	690	62.7	0.59	1.57	2.9	5.12	1.2	2.1
0.55	**M3AA**	**90 L**	3GAA	094 002-••E	680	64.9	0.61	2.27	3.0	7.72	1.4	1.8
0.75	**M3AA**	**100 LA**	3GAA	104 001-••E	690	72.0	0.63	2.5	3.9	10.38	1.9	2.3
1.1	**M3AA**	**100 LB**	3GAA	104 002-••E	700	74.0	0.68	3.3	3.9	15.01	1.9	2.3
1.5	**M3AA**	**112 M**	3GAA	114 001-••C	685	74.0	0.69	4.6	3.7	21	1.7	2.3
2.2	**M3AA**	**132 S**	3GAA	134 001-••C	715	80.0	0.71	5.9	4.7	29	1.5	2.3
3	**M3AA**	**132 M**	3GAA	134 002-••C	715	82.0	0.72	7.8	5.2	40	2.2	2.4
4	**M3AA**	**160 MA**	3GAA	164 101-••C	710	83.5	0.71	10.2	4.7	54	1.7	2.4
5.5	**M3AA**	**160 M**	3GAA	164 102-••C	705	84.0	0.72	13.8	5.0	74	2.1	2.3
7.5	**M3AA**	**160 L**	3GAA	164 103-••C	710	85.7	0.72	18.6	4.9	100	2.1	2.4
11	**M3AA**	**180 L**	3GAA	184 101-••C	715	89.0	0.77	24.5	5.3	147	2.0	2.3
15	**M3AA**	**200 MLA**	3GAA	204 001-••C	735	91.0	0.83	30	6.8	196	2.6	2.9
18.5	**M3AA**	**225 SMA**	3GAA	224 001-••C	730	91.0	0.79	39	6.2	242	2.5	2.8
22	**M3AA**	**225 SMB**	3GAA	224 002-••C	730	91.0	0.81	47	5.8	288	2.1	2.3
30	**M3AA**	**250 SMA**	3GAA	254 001-••C	735	92.6	0.81	61	6.7	390	2.0	2.3
37	**M3AA**	**280 SMA**	3GAA	284 001-••C	735	92.5	0.82	77	6.8	479	2.6	2.8
750 r/min = 8 poles					**380 V 50 Hz**				**High-output design**			
0.65	**M3AA**	**90 LB**	3GAA	094 003-••E	680	63.7	0.56	3	2.8	9.13	1.6	1.8
1.3	**M3AA**	**100 LC**	3GAA	104 003-••E	670	70.7	0.68	4.1	3.4	18.5	1.8	2.2
1.8	**M3AA**	**112 MB**	3GAA	114 002-••C	690	74.0	0.68	5.7	4.2	24	2.0	2.4
3.5	**M3AA**	**132 MB**	3GAA	134 003-••C	710	80.0	0.71	9.4	5.5	47	2.2	2.6
8.5	**M3AA**	**160 LB**	3GAA	164 104-••C	695	84.6	0.73	21.5	4.9	114	2.0	2.3
13.5	**M3AA**	**180 LB**	3GAA	184 102-••C	715	89.0	0.80	31	6.1	179	2.4	2.6
18.5	**M3AA**	**200 MLB**	3GAA	204 002-••C	735	91.2	0.83	37	6.6	241	2.3	2.8
30	**M3AA**	**225 SMC**	3GAA	224 003-••C	730	91.5	0.80	65	6.2	392	2.5	2.7
37	**M3AA**	**250 SMB**	3GAA	254 002-••C	735	92.5	0.82	77	6.8	479	2.6	2.8

The bullets in the product code indicate choice of mounting arrangement, voltage and frequency, generation code (see ordering information page).

Marine aluminum motors

Technical data, Non-Essential/Essential Services

IP 55 - IC 411 - temperature rise 90 K

Output kW	Motor type		Speed r/min	Effi-ciency %	Power factor cos φ	Current I_N A	Current I_s / I_N	Torque T_N Nm	Torque T_s / T_N	Torque T_{max} / T_N	Moment of inertia J=1/4 GD² kgm²	Weight kg
900 r/min = 8 poles			**440 V 60 Hz**					**Basic design**				
0.07	**M2VA**	**63 B**	815	39.3	0.50	0.47	1.8	0.82	1.7	1.7	0.00027	4.5
0.12	**M2VA**	**71 A**	825	47.4	0.64	0.52	2.2	1.39	1.7	1.7	0.00063	5.5
0.18	**M2VA**	**71 B**	825	48.5	0.65	0.75	2.2	2.08	1.7	1.7	0.00081	6.5
0.25	**M2VA**	**80 A**	840	60.8	0.60	0.9	3.1	2.84	2.3	2.7	0.001842	10
0.32	**M2VA**	**80 B**	815	70.1	0.60	1	3.1	3.75	2.3	2.5	0.002176	10
0.45	**M3AA**	**90 S**	830	62.7	0.59	1.57	2.9	4.7	1.2	2.1	0.0032	13
0.65	**M3AA**	**90 L**	815	64.9	0.61	2.27	3.0	7	1.4	1.8	0.0043	16
0.9	**M3AA**	**100 LA**	830	72.0	0.63	2.5	3.9	9.5	1.9	2.4	0.0069	20
1.3	**M3AA**	**100 LB**	840	74.0	0.68	3.3	3.9	14	1.9	2.4	0.0082	23
1.7	**M3AA**	**112 M**	845	76.3	0.65	4.4	4.2	19.3	1.6	2.4	0.016	28
2.5	**M3AA**	**132 S**	870	81.6	0.70	5.9	4.8	28	1.5	2.5	0.038	46
3.5	**M3AA**	**132 M**	870	83.7	0.68	7.8	5.2	39	2.0	2.4	0.045	53
5.2	**M3AA**	**160 MA**	850	84.4	0.75	11.5	4.4	58	1.6	2.1	0.072	75
6.4	**M3AA**	**160 M**	855	84.9	0.72	13.8	4.8	71	1.8	2.3	0.091	88
8.6	**M3AA**	**160 L**	855	85.7	0.73	18.5	4.9	96	2.0	2.4	0.131	118
13.5	**M3AA**	**180 L**	865	89.7	0.80	25.5	5.0	149	1.7	2.1	0.224	147
18	**M3AA**	**200 MLA**	885	91.0	0.84	32	6.6	196	2.3	2.7	0.45	175
21	**M3AA**	**225 SMA**	880	91.0	0.79	39	6.5	227	2.3	3.0	0.61	210
25	**M3AA**	**225 SMB**	880	91.4	0.81	45	5.8	271	2.0	2.3	0.68	225
34	**M3AA**	**250 SMA**	885	92.8	0.81	61	6.8	367	1.9	2.3	1.25	280
42	**M3AA**	**280 SMA**	885	93.1	0.82	74	6.8	452	2.4	2.8	1.52	320
900 r/min = 8 poles			**440 V 60 Hz**					**High-output design**				
0.75	**M3AA**	**90 LB**	840	63.7	0.56	3	2.8	8.53	1.6	1.8	0.0048	18
1.5	**M3AA**	**100 LC**	820	70.7	0.68	4.1	3.4	17.5	1.8	2.2	0.009	26
2.1	**M3AA**	**112 MB**	840	77.0	0.66	5.5	4.4	24	1.9	2.7	0.018	33
4	**M3AA**	**132 MB**	860	81.7	0.69	9.3	5.8	44	2.1	2.6	0.049	59
9.8	**M3AA**	**160 LB**	845	86.6	0.73	21.5	4.9	109	1.9	2.3	0.131	118
15.5	**M3AA**	**180 LB**	865	90.2	0.80	30	6.1	170	2.3	2.6	0.24	155
21	**M3AA**	**200 MLB**	885	91.6	0.83	37	6.8	227	2.2	2.8	0.54	200
34	**M3AA**	**225 SMC**	880	92.2	0.80	63	6.3	368	2.3	2.7	0.8	255
42	**M3AA**	**250 SMB**	885	93.1	0.82	74	6.8	452	2.4	2.8	1.52	320

Marine aluminum motors, two speed

Technical data, Non-Essential/Essential Services

IP 55 - IC 411 - temperature rise 90 K

Output kW	Motor type	Product code	Speed r/min	Effi-ciency %	Power factor cos φ	Current I_N / A	Current I_s / I_N	Torque T_N / Nm	Torque T_s / T_N	Torque T_{max} / T_N
3000/1500 r/min =2/4 poles			**380 V 50 Hz**		**Fan drive, two separate windings**					
1.3/0.22	**M3AA 90 S**	3GAA 098 201-••E	2865/1465	75.0/43.5	0.88/0.64	2.9/1.2	5.2/3.0	4.3/1.4	1.6/0.9	2.3/2.1
1.9/0.3	**M3AA 90 L**	3GAA 098 202-••E	2865/1465	77.0/55.0	0.89/0.69	4.2/1.2	5.2/3.4	6.3/1.9	1.7/0.9	2.3/2.1
2.4/0.4	**M3AA 100 L**	3GAA 108 201-••E	2895/1465	76.0/56.0	0.88/0.68	5.3/1.6	6.2/3.7	7.8/2.6	20/0.9	2.8/2.4
3.4/0.6	**M3AA 112 M**	3GAA 118 204-••C	2880/1465	83.0/68.0	0.92/0.60	6.8/2.1	6.5/5.7	11.3/3.9	1.6/1.6	2.1/2.5
4.7/0.8	**M3AA 132 S**	3GAA 138 207-••C	2900/1475	84.0/63.0	0.90/0.60	9.5/3.3	8.4/5.8	15.5/5.2	2.5/2.2	3.0/3.1
6.7/1.2	**M3AA 132 M**	3GAA 138 208-••C	2875/1470	85.0/68.0	0.93/0.67	12.9/4	7.4/5.8	22/7.8	2.1/1.8	2.6/2.5
11.4/1.7	**M3AA 160 M**	3GAA 168 352-••C	2940/1470	88.8/77.3	0.90/0.75	22/4.5	8.5/5.8	37/11	2.3/2.0	3.2/2.4
15.3/2.2	**M3AA 160 L**	3GAA 168 353-••C	2940/1480	89.5/78.4	0.91/0.66	28/6.5	8.1/7.2	50/14	2.3/3.0	3.0/3.4
17.5/2.5	**M3AA 180 M**	3GAA 188 357-••C	2935/1465	88.6/76.5	0.91/0.78	33/6.5	6.7/5.5	57/16	2.0/1.9	2.4/1.9
22/3.2	**M3AA 180 L**	3GAA 188 358-••C	2940/1465	90.5/77.1	0.91/0.80	41/8	8.1/4.5	71/21	2.7/1.8	3.0/1.8
26/3.6	**M3AA 200 MLA**	3GAA 208 210-••C	2945/1480	91.5/85.0	0.89/0.72	49/9.2	8.3/7.3	84/23	2.3/2.7	2.9/2.8
33/4.8	**M3AA 200 MLB**	3GAA 208 211-••C	2945/1480	92.5/86.5	0.91/0.74	61/11.9	8.0/7.0	107/31	2.3/2.7	2.7/2.7
38/5.3	**M3AA 225 SMB**	3GAA 228 207-••C	2950/1475	92.5/86.5	0.90/0.78	70/12.1	7.3/5.9	123/34	2.3/2.8	2.4/2.1
44/6.2	**M3AA 225 SMC**	3GAA 228 208-••C	2955/1480	93.0/87.5	0.91/0.78	80/14	7.5/6.2	142/40	2.5/2.9	2.5/2.1
62/8.8	**M3AA 250 SMB**	3GAA 258 204-••C	2965/1485	94.0/89.5	0.90/0.76	111/20	9.5/7.3	200/57	2.3/2.6	3.2/2.3
3000/1500 r/min =2-4 poles			**380 V 50 Hz**		**Fan drive, Dahlander-connection**					
1.4/0.33	**M3AA 90 S**	3GAA 098 101-••E	2855/1455	74.0/61.5	0.88/0.68	3.2/1.2	5.0/3.5	4.7/2.1	1.7/1.0	2.3/1.9
2.1/0.45	**M3AA 90 L**	3GAA 098 102-••E	2850/1455	78.0/69.0	0.89/0.66	4.6/1.5	5.6/4.0	7/2.9	2.0/1.1	2.5/2.0
2.4/0.47	**M3AA 90 LB**	3GAA 098 103-••E	2850/1455	77.0/71.0	0.89/0.63	5.3/1.6	5.8/4.0	8/3.1	2.1/1.3	2.3/2.1
3/0.6	**M3AA 100 L**	3GAA 108 101-••E	2865/1465	77.0/73.5	0.91/0.62	6.5/2	5.7/4.4	9.9/3.9	2.0/1.2	2.5/2.5
3.2/0.7	**M3AA 100 LB**	3GAA 108 102-••E	2880/1465	78.0/76.5	0.92/0.66	6.7/2.1	6.1/4.4	11/4.6	2.1/1.1	2.5/2.7
4.2/0.9	**M3AA 112 M**	3GAA 118 104-••C	2875/1450	83.0/78.0	0.93/0.72	8.2/2.4	6.7/5.8	14/5.9	1.7/1.9	2.2/2.8
6/1.2	**M3AA 132 S**	3GAA 138 127-••C	2865/1455	83.0/81.0	0.92/0.79	11.9/3.2	7.0/7.2	20/7.9	1.8/2.5	2.4/3.2
7.8/1.6	**M3AA 132 M**	3GAA 138 108-••C	2875/1455	84.0/81.0	0.93/0.72	15/4.1	7.2/6.3	26/10.5	2.4/2.6	2.6/3.2
8.8/1.8	**M3AA 160 MA**	3GAA 168 301-••C	2915/1465	84.0/81.6	0.90/0.71	18/5	5.8/5.5	29/12	1.4/2.0	2.2/2.3
14/2.8	**M3AA 160 M**	3GAA 168 302-••C	2920/1465	86.4/84.1	0.92/0.74	27/7	6.2/5.6	46/18	1.6/2.1	2.2/2.4
17/4	**M3AA 160 L**	3GAA 168 303-••C	2930/1465	88.6/86.4	0.91/0.74	32.5/9.5	7.5/5.7	55/26	2.1/2.2	2.8/2.5
18.9/4.1	**M3AA 180 M**	3GAA 188 305-••C	2935/1470	88.9/87.1	0.92/0.76	35.5/9.5	6.9/5.5	62/27	2.0/2.1	2.5/2.3
22.8/4.6	**M3AA 180 L**	3GAA 188 306-••C	2940/1470	89.8/88.1	0.92/0.75	42/10.5	7.5/5.9	74/30	2.1/2.2	2.6/2.5
28/7	**M3AA 200 MLA**	3GAA 208 110-••C	2940/1465	90.0/89.0	0.89/0.85	53/15	7.3/6.4	91/46	2.1/2.1	2.6/2.3
34/8.8	**M3AA 200 MLB**	3GAA 208 111-••C	2950/1475	91.5/91.0	0.89/0.85	63/18	7.7/6.4	110/57	2.1/2.1	2.7/2.4
37/9.7	**M3AA 200 MLC**	3GAA 208 112-••C	2950/1470	92.5/91.0	0.89/0.77	70/21	7.9/5.7	120/63	2.3/2.1	3.1/2.5
40/11.4	**M3AA 225 SMB**	3GAA 228 107-••C	2955/1475	93.0/91.5	0.92/0.82	71/23	7.5/5.5	129/74	2.0/2.1	2.6/2.2
48/13.2	**M3AA 225 SMC**	3GAA 228 108-••C	2955/1475	93.5/92.5	0.91/0.82	86/27	7.5/5.5	155/85	2.1/2.0	2.7/2.3
66/22	**M3AA 250 SMB**	3GAA 258 104-••C	2965/1475	94.5/93.0	0.92/0.82	116/44	9.1/5.6	213/142	2.4/2.1	3.2/2.3

[1] On request

Data for frame sizes 56 to 80 on request.

The bullets in the product code indicata choice of mounting arrangement, voltage and frequency, generation code (see ordering information)

Marine aluminum motors, two speed

Technical data, Non-Essential/Essential Services

IP 55 - IC 411 - temperature rise 90 K

Output kW	Motor type		Speed r/min	Effi-ciency %	Power factor cos φ	Current I_N / A	Current I_s / I_N	Torque T_N / Nm	Torque T_s / T_N	Torque T_{max} / T_N	Moment of inertia J=1/4 GD² kgm²	Weight kg
3600/1800 r/min =2/4 poles				**440 V 60 Hz**		**Fan drive, two separate windings**						
1.56/0.27	**M3AA**	**90 S**	3440/1760	75.0/43.5	[1]	2.9/1.2	5.2/3.0	4.1/1.3	1.5/0.9	2.3/2.0	0.0019	13
2.3/0.36	**M3AA**	**90 L**	3440/1760	77.0/55.0	0.89/0.69	4.2/1.2	5.2/3.4	6/1.8	1.6/0.9	2.2/2.0	0.0024	16
[1]	**M3AA**	**100 L**	[1]	[1]	[1]	[1]	[1]	[1]	[1]	[1]	0.0041	21
4/0.7	**M3AA**	**112 M**	3480/1765	84.0/70.0	0.93/0.61	6.7/2	6.6/6.0	11/3.8	1.5/1.5	2.0/2.3	0.012	32
5.5/1	**M3AA**	**132 S**	3500/1775	85.0/67.0	0.90/0.60	9.4/3.2	8.5/5.9	15/5.4	2.4/1.9	2.8/2.7	0.016	42
7.7/1.4	**M3AA**	**132 M**	3480/1770	86.0/71.0	0.93/0.66	12.6/3.9	7.6/5.9	21.1/7.5	2.0/1.7	2.5/2.4	0.022	56
13.1/2	**M3AA**	**160 M**	3540/1770	88.8/77.3	0.90/0.75	22/4.5	8.5/5.8	35/11	2.3/1.8	3.1/2.3	0.054	94
17.6/2.5	**M3AA**	**160 L**	3540/1780	89.5/78.4	0.91/0.66	28/6.5	8.1/7.2	48/13	2.1/2.7	2.9/3.4	0.057	100
20.1/2.9	**M3AA**	**180 M**	3535/1765	88.6/76.5	0.91/0.78	33/6.5	6.7/5.5	54/16	1.8/1.7	2.4/1.9	0.094	137
25.3/3.7	**M3AA**	**180 L**	3540/1765	90.5/77.1	0.91/0.80	41/8	8.1/4.5	68/20	2.4/1.6	2.9/1.8	0.108	151
30/4.2	**M3AA**	**200 MLA**	3545/1780	91.5/85.0	0.89/0.72	49/9.2	8.3/7.3	81/23	2.1/2.4	2.8/2.7	0.15	175
38/5.6	**M3AA**	**200 MLB**	3545/1780	92.5/86.5	0.91/0.74	61/11.9	8.0/7.0	102/30	2.1/2.4	2.6/2.6	0.19	205
44/6.1	**M3AA**	**225 SMB**	3550/1775	92.5/86.5	0.90/0.78	70/12.1	7.3/5.9	118/33	2.1/2.5	2.3/2.0	0.26	235
51/7.2	**M3AA**	**225 SMC**	3555/1780	93.0/87.5	0.91/0.78	80/14	7.5/6.2	137/39	2.2/2.6	2.4/2.0	0.29	260
72/10.2	**M3AA**	**250 SMB**	3565/1785	94.0/89.5	0.90/0.76	111/20	9.5/7.3	193/55	2.1/2.3	3.1/2.3	0.57	330
3600/1800 r/min =2-4 poles				**440 V 60 Hz**		**Fan drive, Dahlander-connection**						
1.7/0.4	**M3AA**	**90 S**	3426/1746	74.0/61.5	0.88/0.68	3.2/1.2	5.0/3.5	4.5/2	1.6/1.0	2.2/1.8	0.0019	13
2.5/0.54	**M3AA**	**90 L**	3420/1746	78.0/69.0	0.89/0.66	4.6/1.5	5.6/4.0	6.7/2.8	1.9/1.0	2.5/1.9	0.0024	16
2.9/0.56	**M3AA**	**90 LB**	3420/1746	77.0/71.0	0.89/0.63	5.3/1.6	5.8/4.0	7.7/3	2.0/1.2	2.2/2.0	0.0027	18
3.6/0.72	**M3AA**	**100 L**	3438/1758	77.0/73.5	0.91/0.62	6.5/2	5.7/4.4	9.5/3.7	1.9/1.1	2.4/2.4	0.0041	21
3.8/0.8	**M3AA**	**100 LB**	3456/1758	78.0/76.5	0.92/0.66	6.7/2.1	6.1/4.4	10.6/4.4	2.0/1.0	2.4/2.6	0.005	25
4.8/1.1	**M3AA**	**112 M**	3440/1745	85.0/80.0	0.93/0.74	8/2.4	6.9/5.8	13.3/6	1.6/1.8	2.2/2.7	0.012	32
6.9/1.4	**M3AA**	**132 S**	3470/1750	85.0/83.0	0.92/0.70	11.6/3.2	7.2/7.2	19/7.6	1.7/2.4	2.3/3.0	0.016	42
9/1.9	**M3AA**	**132 M**	3480/1750	86.0/83.0	0.93/0.73	14.7/4.1	7.3/6.3	25/10.4	2.3/2.5	2.5/3.1	0.022	56
10.1/2.1	**M3AA**	**160 MA**	3515/1765	84.4/81.6	0.90/0.71	18/5	5.8/5.5	27/11	1.3/1.8	2.2/2.5	0.039	73
16.1/3.2	**M3AA**	**160 M**	3520/1765	86.4/84.1	0.92/0.74	27/7	6.2/5.6	44/17	1.4/1.9	2.2/2.4	0.054	94
19.6/4.6	**M3AA**	**160 L**	3530/1765	88.6/86.4	0.91/0.74	32.5/9.5	7.5/5.7	53/25	1.9/2.0	2.7/2.5	0.057	100
21.7/4.7	**M3AA**	**180 M**	3535/1770	88.9/87.1	0.92/0.76	35.5/9.5	6.9/5.5	59/25	1.8/1.9	2.5/2.3	0.094	137
26.2/5.3	**M3AA**	**180 L**	3540/1770	89.8/88.1	0.92/0.75	42/10.5	7.5/5.9	71/29	1.9/2.0	2.6/2.5	0.108	151
32/8.1	**M3AA**	**200 MLA**	3540/1765	90.0/89.0	0.89/0.85	53/15	7.3/6.4	86/44	1.9/1.9	2.6/2.3	0.29	180
39/10.2	**M3AA**	**200 MLB**	3550/1775	91.5/91.0	0.89/0.85	63/18	7.7/6.4	105/55	1.9/1.9	2.7/2.3	0.34	205
43/11.2	**M3AA**	**200 MLC**	3550/1770	92.5/91.0	0.89/0.77	69/21	7.9/5.7	116/60	2.0/1.9	3.0/2.5	0.19	205
46/13.2	**M3AA**	**225 SMB**	3555/1775	93.0/91.5	0.92/0.82	71/23	7.5/5.5	124/71	1.8/1.9	2.5/2.2	0.26	235
56/15.3	**M3AA**	**225 SMC**	3555/1775	93.5/92.5	0.91/0.82	86/27	7.6/5.5	148/82	1.9/1.8	2.7/2.2	0.29	260
76/25	**M3AA**	**250 SMB**	3565/1775	94.5/93.0	0.92/0.92	116/44	9.1/5.6	204/135	2.2/1.9	3.1/2.3	0.57	330

[1] On request

Data for frame sizes 56 to 80 on request.

Marine aluminum motors, two speed

Technical data, Non-Essential/Essential Services

IP 55 - IC 411 - temperature rise 90 K

Output kW	Motor type	Product code	Speed r/min	Effi-ciency %	Power factor cos φ	Current I_N A	Current I_s / I_N	Torque T_N Nm	Torque T_s / T_N	Torque T_{max} / T_N
1500/1000 r/min =4/6 poles			**380 V 50 Hz**		**Fan drive, two separate windings**					
1/0.3	**M3AA 90 S**	3GAA 098 204-••E	1390/935	68.5/49.5	0.85/0.71	2.6/1.3	3.8/2.4	6.8/3.0	1.6/0.9	2.0/1.5
1.3/0.45	**M3AA 90 L**	3GAA 098 205-••E	1400/925	72.0/54.5	0.85/0.74	3.2/1.7	4.5/2.6	8.7/4.5	1.8/0.9	2.2/1.6
2/0.6	**M3AA 100 LA**	3GAA 108 203-••E	1420/955	74.5/59.5	0.87/0.73	4.7/2.1	4.5/3.0	13/5.9	1.6/0.9	2.1/1.7
2.2/0.8	**M3AA 100 LB**	3GAA 108 204-••E	1430/955	77.0/65.0	0.85/0.72	5.1/2.6	5.7/3.2	14/7.9	2.0/1.0	2.5/1.8
2.9/0.9	**M3AA 112 M**	3GAA 118 205-••C	1445/975	81.0/65.0	0.85/0.66	6.4/3.1	6.6/4.2	19.2/8.8	1.2/1.0	2.2/2.2
4.2/1.4	**M3AA 132 S**	3GAA 138 229-••C	1460/985	83.0/68.0	0.86/0.64	8.9/4.8	6.4/4.2	28/13.6	1.5/1.0	2.3/2.2
5.5/1.8	**M3AA 132 M**	3GAA 138 230-••C	1460/980	84.0/71.0	0.86/0.72	11.5/5.3	7.0/4.5	36/17.5	1.8/1.3	2.5/2.0
9.2/3.1	**M3AA 160 M**	3GAA 168 354-••C	1460/970	86.6/74.0	0.83/0.76	19.5/8.5	6.5/4.0	60/31	2.0/1.2	2.5/1.7
12.7/4	**M3AA 160 L**	3GAA 168 355-••C	1460/970	88.1/75.7	0.83/0.74	26.5/11	7.1/4.5	83/39	2.3/1.4	2.7/1.9
14/4.4	**M3AA 180 M**	3GAA 188 359-••C	1470/980	88.7/76.5	0.83/0.72	29/12	6.5/4.5	91/43	1.9/1.3	2.5/2.0
17.6/5.7	**M3AA 180 L**	3GAA 188 360-••C	1470/980	89.7/78.5	0.83/0.73	36/15	6.8/4.5	114/56	2.0/1.3	2.6/1.9
20/6.3	**M3AA 200 MLA**	3GAA 208 213-••C	1475/985	89.5/84.0	0.88/0.87	39/13.8	8.0/8.0	129/61	1.7/2.0	2.9/3.0
26/7.9	**M3AA 200 MLB**	3GAA 208 214-••C	1470/985	90.0/83.5	0.90/0.89	49/16.6	8.0/6.9	169/77	1.7/1.2	2.8/2.2
31/11	**M3AA 225 SMB**	3GAA 228 209-••C	1470/985	91.0/85.0	0.91/0.89	58/22	7.6/6.0	201/107	1.5/1.2	2.7/2.1
37/12.3	**M3AA 225 SMC**	3GAA 228 210-••C	1475/985	91.5/89.0	0.89/0.89	70/25	8.6/7.0	240/119	1.7/1.4	3.1/2.4
55/16.3	**M3AA 250 SMB**	3GAA 258 205-••C	1475/985	93.5/87.0	0.89/0.79	101/37	7.8/7.5	356/158	2.5/3.1	2.8/2.7
1500/750 r/min =4/8 poles			**380 V 50 Hz**		**Fan drive, two separate windings**					
1/0.13	**M3AA 90 S**	3GAA 098 207-••E	1390/695	66.0/35.0	0.85/0.71	2.7/0.8	3.5/1.9	6.8/1.8	1.4/0.9	1.8/1.5
1.4/0.18	**M3AA 90 L**	3GAA 098 208-••E	1410/705	69.5/37.5	0.83/0.61	3.7/1.2	4.0/2.1	9.4/2.4	1.5/1.0	2.1/1.9
1.65/0.25	**M3AA 100 LA**	3GAA 108 206-••E	1430/715	75.5/41.5	0.85/0.61	4/1.5	5.0/2.3	10.7/3.3	1.7/1.0	2.3/1.9
2/0.33	**M3AA 100 LB**	3GAA 108 207-••E	1430/715	77.0/48.5	0.81/0.61	4.6/1.7	5.4/2.4	13/4.3	1.9/1.0	2.5/2.0
2.7/0.4	**M3AA 112 M**	3GAA 118 206-••C	1445/725	81.0/51.0	0.87/0.61	5.8/1.9	6.9/8.9	17.8/5.3	1.5/1.4	2.4/2.3
4/0.6	**M3AA 132 S**	3GAA 138 231-••C	1460/740	83.0/52.0	0.86/0.56	8.5/3.1	6.0/3.5	26/7.7	1.3/1.0	2.1/2.2
5/0.7	**M3AA 132 M**	3GAA 138 232-••C	1455/735	83.0/51.0	0.88/0.59	10.4/3.6	6.2/3.3	33/9.1	1.5/1.3	2.2/2.3
7.8/1.2	**M3AA 160 M**	3GAA 168 356-••C	1460/735	86.0/64.0	0.83/0.52	17/5.5	6.5/3.9	51/16	2.0/2.3	2.5/2.6
11.4/1.6	**M3AA 160 L**	3GAA 168 357-••C	1460/735	87.3/59.0	0.84/0.51	24/8	6.4/3.9	75/21	2.0/1.9	2.4/2.7
14/2	**M3AA 180 M**	3GAA 188 361-••C	1475/740	89.3/63.6	0.82/0.51	30/9.5	7.2/4.0	92/26	2.2/1.8	2.8/2.7
16.7/2.4	**M3AA 180 L**	3GAA 188 362-••C	1475/740	90.1/67.5	0.83/0.52	35/10	7.3/3.9	108/31	2.3/1.7	2.8/2.5
23/2.9	**M3AA 200 MLA**	3GAA 208 216-••C	1475/740	91.0/73.0	0.85/0.59	46/10.2	7.0/4.7	149/37	2.1/2.4	2.5/2.6
26/3.3	**M3AA 200 MLB**	3GAA 208 217-••C	1470/740	91.5/75.5	0.86/0.59	50/11.4	7.0/4.8	169/43	2.2/2.3	2.5/2.3
33/4.6	**M3AA 225 SMB**	3GAA 228 211-••C	1480/740	91.5/80.5	0.84/0.63	66/14	7.6/5.3	213/59	2.2/2.3	2.7/2.0
40/6.2	**M3AA 225 SMC**	3GAA 228 212-••C	1480/740	92.5/82.0	0.86/0.66	78/17.7	8.0/5.0	258/80	2.4/2.1	2.8/2.1
55/8.8	**M3AA 250 SMB**	3GAA 258 206-••C	1475/740	93.5/83.0	0.89/0.65	101/25	7.8/6.2	356/114	2.5/3.1	2.8/2.8

Data for frame sizes 56 to 80 on request.

The bullets in the product code indicata choice of mounting arrangement, voltage and frequency, generation code (see ordering information)

Marine aluminum motors, two speed

Technical data, Non-Essential/Essential Services

IP 55 - IC 411 - temperature rise 90 K

Output kW	Motor type		Speed r/min	Effi-ciency %	Power factor cos φ	Current I_N / A	Current I_s / I_N	Torque T_N / Nm	Torque T_s / T_N	Torque T_{max} / T_N	Moment of inertia J=1/4 GD² kgm²	Weight kg
1800/1200 r/min =4/6 poles				**440 V 60 Hz**		**Fan drive, two separate windings**						
1.2/0.36	**M3AA**	**90 S**	1668/1122	68.5/49.5	0.85/0.71	2.6/1.3	3.8/2.4	6.5/2.8	1.5/0.9	2.0/1.4	0.0032	13
1.56/0.54	**M3AA**	**90 L**	1680/1104	72.0/54.5	0.85/0.74	3.2/1.7	4.5/2.6	8.4/4.3	1.7/0.9	2.1/1.5	0.0043	16
2.4/0.72	**M3AA**	**100 LA**	1704/1146	74.5/59.5	0.87/0.73	4.7/2.1	4.5/3.0	12.5/5.6	1.5/0.9	2.0/1.6	0.0069	20
2.6/0.9	**M3AA**	**100 LB**	1716/1146	77.0/65.0	0.85/0.72	5.1/2.6	5.7/3.2	13.5/7.5	1.9/1.0	2.4/1.7	0.0082	23
3.3/1.1	**M3AA**	**112 M**	1750/1175	83.0/69.0	0.85/0.67	6.1/3.1	6.9/4.2	18/8.9	1.2/1.0	2.2/2.2	0.018	33
4.8/1.6	**M3AA**	**132 S**	1760/1185	85.0/71.0	0.86/0.63	8.7/4.7	6.6/4.3	26/12.9	1.4/1.0	2.2/2.2	0.038	48
6.3/2.1	**M3AA**	**132 M**	1760/1180	86.0/74.0	0.86/0.71	11.2/5.3	7.2/4.5	34/17	1.7/1.2	2.4/1.9	0.048	59
10.5/3.6	**M3AA**	**160 M**	1760/1170	86.6/74.0	0.83/0.76	19.5/8.5	6.5/4.0	57/29	1.8/1.1	2.5/1.7	0.089	93
14.6/4.6	**M3AA**	**160 L**	1760/1170	88.1/75.7	0.83/0.74	26.5/11	7.1/4.5	79/38	2.1/1.3	2.7/1.9	0.119	117
16.1/5.1	**M3AA**	**180 M**	1770/1180	88.8/76.5	0.83/0.72	29/12	6.5/4.5	87/41	1.7/1.2	2.5/1.9	0.176	131
20.2/6.6	**M3AA**	**180 L**	1770/1180	89.7/78.5	0.83/0.73	36/15	6.8/4.5	109/53	1.8/1.2	2.6/1.9	0.224	159
23/7	**M3AA**	**200 MLA**	1775/1185	89.5/84.0	0.88/0.87	39/13.8	8.0/8.1	124/56	1.5/1.9	2.8/3.0	0.45	175
30/9	**M3AA**	**200 MLB**	1770/1185	90.0/83.5	0.90/0.89	49/16.6	8.0/6.9	162/73	1.5/1.1	2.7/2.2	0.54	200
36/13	**M3AA**	**225 SMB**	1770/1185	91.0/85.0	0.91/0.89	58/22	7.6/6.1	194/105	1.3/1.1	2.6/2.0	0.68	225
43/14	**M3AA**	**225 SMC**	1775/1185	91.5/89.0	0.89/0.89	69/25	8.6/7.0	231/113	1.6/1.3	3.0/2.4	0.8	255
64/19	**M3AA**	**250 SMB**	1775/1185	93.5/87.0	0.89/0.79	101/37	7.8/7.5	344/153	2.2/2.7	2.7/2.6	0.88	335
1800/900 r/min =4/8 poles				**440 V 60 Hz**		**Fan drive, two separate windings**						
1.2/0.16	**M3AA**	**90 S**	1668/834	66.0/35.0	0.85/0.71	2.7/0.8	3.5/1.9	6.5/1.7	1.3/0.9	1.8/1.4	0.0032	13
1.7/0.2	**M3AA**	**90 L**	1692/846	69.5/37.5	0.83/0.61	3.7/1.2	4.0/2.1	9/2.3	1.4/1.0	2.0/1.8	0.0043	16
1.9/0.3	**M3AA**	**100 LA**	1716/858	75.5/41.5	0.85/0.61	4/1.5	5.0/2.3	9.6/3.2	1.6/1.0	2.2/1.8	0.0069	20
2.4/0.4	**M3AA**	**100 LB**	1716/858	77.0/48.5	0.81/0.61	4.6/1.7	5.4/2.4	12.5/4.1	1.8/1.0	2.4/2.0	0.0082	23
3.1/0.5	**M3AA**	**112 M**	1745/875	83.0/54.0	0.87/0.61	5.7/1.9	7.0/8.9	17/5.5	1.4/1.2	2.3/2.0	0.018	32
4.6/0.7	**M3AA**	**132 S**	1760/890	85.0/56.0	0.86/0.54	8.3/3	6.1/3.7	25/7.5	1.3/1.0	2.0/2.1	0.038	48
5.8/0.8	**M3AA**	**132 M**	1760/890	85.0/53.0	0.88/0.55	10.2/3.5	6.3/3.4	32/8.6	1.5/1.3	2.1/2.3	0.048	59
9/1.4	**M3AA**	**160 M**	1760/885	86.0/64.0	0.83/0.52	17/5.5	6.5/3.9	51/15	1.7/2..0	2.3/2.5	0.089	92
13.1/1.8	**M3AA**	**160 L**	1760/885	87.3/59.0	0.84/0.51	24/8	6.4/3.9	71/19	1.8/1.7	2.4/2.7	0.119	117
16.1/2.3	**M3AA**	**180 M**	1775/890	89.3/63.6	0.82/0.51	30/9.5	7.2/4.0	87/25	2.0/1.6	2.8/2.7	0.176	130
19.2/2.8	**M3AA**	**180 L**	1775/890	90.1/67.5	0.83/0.52	35/10	7.3/3.9	103/30	2.1/1.5	2.8/2.4	0.224	159
27/3.4	**M3AA**	**200 MLA**	1775/890	91.0/73.0	0.85/0.59	46/10.2	7.0/4.7	143/36	1.9/2.2	2.5/2.5	0.28	180
30/3.8	**M3AA**	**200 MLB**	1770/890	91.5/75.5	0.86/0.59	50/11.4	7.0/4.8	162/41	2.0/2.0	2.4/2.2	0.34	205
38/5.3	**M3AA**	**225 SMB**	1780/890	91.5/80.5	0.84/0.63	66/14	7.6/5.3	205/57	1.9/2.1	2.6/2.3	0.41	230
46/7.2	**M3AA**	**225 SMC**	1780/890	92.5/82.0	0.86/0.66	78/17.7	8.0/5.0	248/77	2.1/1.9	2.7/2.1	0.49	265
64/10.2	**M3AA**	**250 SMB**	1775/890	93.5/83.0	0.89/0.65	101/25	7.8/6.2	342/109	2.2/2.7	2.7/2.7	0.89	335

Data for frame sizes 56 to 80 on request.

Marine aluminum motors, two speed

Technical data, Non-Essential/Essential Services

IP 55 - IC 411 - temperature rise 90 K

Output kW	Motor type	Product code	Speed r/min	Effi-ciency %	Power factor cos φ	Current I_N / A	Current I_s / I_N	Torque T_N / Nm	Torque T_s / T_N	Torque T_{max} / T_N
1500/750 r/min =4-8 poles			**380 V 50 Hz**		**Fan drive, Dahlander-connection**					
1/0.26	**M3AA 90 S**	3GAA 098 104-••E	1410/695	71.0/47.5	0.81/0.64	2.7/1.3	4.2/2.2	6.8/3.6	1.8/1.1	2.3/1.7
1.4/0.35	**M3AA 90 L**	3GAA 098 105-••E	1400/695	74.0/54.0	0.83/0.58	3.5/1.7	5.0/2.3	8.5/4.7	2.4/1.3	2.8/1.9
1.5/0.35	**M3AA 90 LB**	3GAA 098 106-••E	1400/705	74.0/58.5	0.84/0.57	3.7/1.6	4.7/2.4	10/4.8	2.0/1.4	2.5/2.1
2/0.5	**M3AA 100 LA**	3GAA 108 103-••E	1420/710	75.0/62.5	0.85/0.61	4.8/2	4.8/2.5	13.5/6.7	1.9/1.1	2.5/1.7
2.5/0.6	**M3AA 100 LB**	3GAA 108 104-••E	1430/715	77.0/67.0	0.83/0.59	6/2.3	5.3/2.7	16/8	2.0/1.0	2.6/2.0
3/0.65	**M3AA 100 LC**	3GAA 108 105-••E	1420/715	76.5/66.5	0.83/0.57	7.2/2.6	5.0/2.7	20/8.7	2.0/1.2	2.5/2.1
3.3/0.7	**M3AA 112 M**	3GAA 118 126-••C	1430/715	81.0/71.0	0.89/0.62	6.9/2.4	6.5/4.6	22/9.3	1.5/1.5	2.3/2.3
4.7/1	**M3AA 132 S**	3GAA 138 131-••C	1450/730	83.0/74.0	0.88/0.62	9.8/3.3	6.1/3.6	31/13.1	1.4/0.9	2.2/1.8
6.1/1.3	**M3AA 132 M**	3GAA 138 132-••C	1465/730	86.0/73.0	0.84/0.55	12.8/4.9	7.7/3.5	40/17	2.0/1.4	2.8/2.6
9.2/2	**M3AA 160 M**	3GAA 168 304-••C	1460/730	87.4/76.2	0.82/0.53	19.5/7.5	7.1/3.6	60/26	2.2/1.4	2.8/2.2
13.6/2.4	**M3AA 160 L**	3GAA 168 305-••C	1460/730	88.1/76.8	0.84/0.49	28.5/9.5	7.0/3.8	89/31	2.2/1.7	2.7/2.5
14.9/3	**M3AA 180 M**	3GAA 188 307-••C	1470/735	88.8/78.7	0.85/0.55	30.5/10.5	6.5/3.4	97/39	1.7/1.2	2.3/1.9
19.3/3.9	**M3AA 180 L**	3GAA 188 308-••C	1475/735	90.1/80.0	0.84/0.52	39/14.5	7.1/3.7	125/51	2.2/1.4	2.7/2.2
26/5.7	**M3AA 200 MLA**	3GAA 208 116-••C	1470/730	90.5/86.0	0.86/0.64	51/15.7	6.9/4.3	169/75	2.2/1.9	2.4/1.9
29/7	**M3AA 200 MLB**	3GAA 208 117-••C	1475/730	91.5/86.5	0.86/0.64	56/19.3	8.0/4.3	188/92	2.7/2.0	2.7/1.9
37/8.8	**M3AA 225 SMB**	3GAA 228 111-••C	1480/740	92.0/89.5	0.78/0.61	79/25	80/5.1	239/114	2.6/2.3	3.1/2.4
44/9.7	**M3AA 225 SMC**	3GAA 228 112-••C	1465/735	92.5/89.5	0.87/0.65	84/26	7.5/4.8	287/126	2.3/2.7	2.5/2.0
53/13.2	**M3AA 250 SMB**	3GAA 258 106-••C	1475/735	93.0/90.0	0.86/0.70	97/31	8.1/4.8	343/171	2.7/2.2	2.8/2.1
3000/1500 r/min =2/4 poles			**380 V 50 Hz**		**Constant torque, two separate windings**					
1.1/0.55	**M3AA 90 S**	3GAA 098 213-••E	2890/1445	74.0/61.0	0.87/0.65	2.6/2.1	4.6/3.3	3.6/3.6	1.2/1.3	2.0/2.0
1.5/0.75	**M3AA 90 L**	3GAA 098 214-••E	2890/1445	73.0/67.0	0.89/0.68	3.5/2.5	5.2/3.7	4.9/4.9	1.3/1.3	2.2/2.0
2/1	**M3AA 100 L**	3GAA 108 212-••E	2890/1455	74.0/65.0	0.91/0.67	4.5/3.5	5.6/3.6	6.5/6.5	1.7/1.3	2.5/2.3
2.6/1.3	**M3AA 112 M**	3GAA 118 201-••C	2885/1450	79.0/67.0	0.94/0.75	5.4/3.5	5.7/4.9	8.6/8.6	1.4/1.4	2.1/2.1
3.7/1.9	**M3AA 132 SB**	3GAA 138 201-••C	2925/1455	82.0/76.0	0.87/0.70	7.9/5.4	8.0/4.6	12.1/12.5	2.1/1.4	2.5/2.3
5.2/2.6	**M3AA 132 M**	3GAA 138 202-••C	2895/1445	83.0/78.0	0.93/0.75	10.3/6.8	6.6/4.9	17.2/17.2	1.7/1.4	2.0/2.1
10.5/5.3	**M3AA 160 M**	3GAA 168 359-••C	2940/1465	87.5/83.8	0.91/0.78	20/12.5	8.1/6.2	34/35	2.2/2.4	2.9/2.5
13.2/6.6	**M3AA 160 L**	3GAA 168 360-••C	2940/1465	89.7/84.5	0.91/0.77	25/16	8.2/6.2	43/43	2.2/2.5	3.0/2.5
15.8/7.9	**M3AA 180 L**	3GAA 188 352-••C	2945/1465	88.9/83.7	0.91/0.77	30/19	7.9/5.3	51/52	2.4/2.1	2.8/2.1
20/11	**M3AA 200 MLA**	3GAA 208 201-••C	2960/1475	90.0/89.0	0.89/0.85	38/22	8.1/7.3	65/71	1.8/2.1	2.9/2.4
26/14	**M3AA 200 MLB**	3GAA 208 202-••C	2960/1475	91.0/90.0	0.90/0.87	48/28	8.5/7.5	84/91	1.9/2.3	3.0/2.6
32/16	**M3AA 225 SMB**	3GAA 228 201-••C	2960/1480	91.5/91.5	0.91/0.76	59/36	8.1/7.3	103/103	2.5/3.9	2.7/2.5
35/18	**M3AA 225 SMC**	3GAA 228 202-••C	2960/1475	92.0/91.5	0.91/0.79	64/39	8.8/6.5	113/117	2.9/3.3	2.9/2.2
44/22	**M3AA 250 SMB**	3GAA 258 201-••C	2965/1485	93.0/93.0	0.91/0.76	80/48	9.1/8.7	142/141	2.2/3.6	3.0/3.0

Data for frame sizes 56 to 80 on request.

The bullets in the product code indicata choice of mounting arrangement, voltage and frequency, generation code (see ordering information)

Marine aluminum motors, two speed

Technical data, Non-Essential/Essential Services

IP 55 - IC 411 - temperature rise 90 K

Output kW	Motor type		Speed r/min	Effi-ciency %	Power factor cos φ	Current I_N / A	Current I_s / I_N	Torque T_N / Nm	Torque T_s / T_N	Torque T_{max} / T_N	Moment of inertia J=1/4 GD² kgm²	Weight kg
1800/900 r/min =4-8 poles				**440 V 60 Hz**		**Fan drive, Dahlander-connection**						
1.2/0.3	**M3AA**	**90 S**	1692/834	71.0/47.5	0.81/0.64	2.7/1.3	4.2/2.2	6.5/3.4	1.7/1.0	2.2/1.6	0.0032	13
1.7/0.4	**M3AA**	**90 L**	1680/834	74.0/54.0	0.83/0.58	3.5/1.7	5.0/2.3	8.2/4.5	2.3/1.2	2.7/1.8	0.0043	16
1.8/0.4	**M3AA**	**90 LB**	1680/846	74.0/58.5	0.84/0.57	3.7/1.6	4.7/2.4	9.6/4.6	1.9/1.3	2.4/2.0	0.0048	18
2.4/0.6	**M3AA**	**100 LA**	1704/852	75.0/62.5	0.85/0.61	4.8/2	4.8/2.5	12.5/6.4	1.8/1.0	2.4/1.7	0.0069	20
3/0.72	**M3AA**	**100 LB**	1716/858	77.0/67.0	0.83/0.59	6/2.3	5.3/2.7	15.4/7.6	1.9/1.0	2.5/1.9	0.0082	23
3.6/0.78	**M3AA**	**100 LC**	1704/858	76.5/66.5	0.83/0.57	7.2/2.6	5.0/2.7	19.2/8.4	1.9/1.1	2.4/2.0	0.009	26
3.8/0.8	**M3AA**	**112 M**	1730/865	83.0/73.0	0.89/0.60	6.7/2.4	6.7/4.6	21/8.8	1.4/1.4	2.2/2.2	0.018	32
5.4/1.1	**M3AA**	**132 S**	1750/880	85.0/77.0	0.88/0.60	9.5/3.1	6.3/3.9	30/11.9	1.9/0.9	2.1/1.8	0.038	48
7/1.5	**M3AA**	**132 M**	1765/880	87.0/75.0	0.84/0.55	12.5/4.8	7.9/3.6	38/16.3	1.9/1.3	2.7/2.5	0.048	59
10.6/2.3	**M3AA**	**160 M**	1760/880	87.4/76.2	0.82/0.53	19.5/7.5	7.1/3.6	58/25	2.0/1.3	2.7/2.2	0.089	94
15.6/2.8	**M3AA**	**160 L**	1760/880	88.1/76.8	0.84/0.49	28.5/9.5	7.0/3.8	85/30	2.0/1.5	2.7/2.4	0.119	117
17.1/3.5	**M3AA**	**180 M**	1770/885	88.8/78.7	0.85/0.55	30.5/10.5	6.5/3.4	92/38	1.5/1.1	2.3/1.8	0.176	137
22.2/4.5	**M3AA**	**180 L**	1775/885	90.1/80.0	0.84/0.52	39/14.5	7.1/3.7	119/49	2.0/1.3	2.7/2.2	0.224	161
30/6.6	**M3AA**	**200 MLA**	1770/880	90.5/86.0	0.86/0.64	51/15.7	7.0/4.3	162/72	2.0/1.7	2.4/1.9	0.29	180
34/8.1	**M3AA**	**200 MLB**	1775/880	91.5/86.5	0.86/0.64	56/19.3	8.0/4.3	183/88	2.4/1.8	2.6/1.9	0.34	205
43/10.2	**M3AA**	**225 SMB**	1780/890	92.0/89.5	0.78/0.61	79/25	8.0/5.1	231/109	2.3/2.1	3.0/2.3	0.49	265
51/11.2	**M3AA**	**225 SMC**	1765/885	92.5/89.5	0.87/0.65	84/26	7.5/4.8	276/121	2.1/1.8	2.5/2.0	0.49	265
61/15.3	**M3AA**	**250 SMB**	1775/885	93.0/90.0	0.86/0.70	97/31	8.1/4.8	328/165	2.4/2.0	2.7/2.0	0.88	335
3600/1800 r/min =2/4 poles				**440 V 60 Hz**		**Constant torque, two separate windings**						
1.32/0.66	**M3AA**	**90 S**	3470/1735	74.0/61.0	0.87/0.65	2.6/2.1	4.6/3.3	3.5/3.4	1.1/1.2	1.9/1.9	0.0019	13
1.8/0.9	**M3AA**	**90 L**	3470/1735	73.0/67.0	0.89/0.68	3.5/2.5	5.2/3.7	4.7/4.7	1.2/1.2	2.1/2.0	0.0024	16
2.4/1.2	**M3AA**	**100 L**	3470/1735	74.0/65.0	0.91/0.67	4.5/3.5	5.6/3.6	6.3/6.3	1.6/1.2	2.4/2.2	0.0041	21
3/1.5	**M3AA**	**112 M**	3485/1750	81.0/78.0	0.94/0.74	5.2/3.4	6.0/5.0	8.2/8.2	1.4/1.4	2.0/2.0	0.012	32
4.2/2.1	**M3AA**	**132 SB**	3525/1755	84.0/79.0	0.87/0.68	7.6/5.2	8.3/4.8	11.4/11.4	2.1/1.4	2.5/2.3	0.016	42
6/3	**M3AA**	**132 M**	3495/1745	85.0/80.0	0.93/0.75	10/6.6	6.8/5.0	16.4/16.4	1.6/1.4	1.9/2.0	0.022	57
12/6.1	**M3AA**	**160 M**	3540/1765	87.5/83.8	0.91/0.78	20/12.5	8.1/6.2	32/33	2.0/2.2	2.2/2.4	0.055	94
15.2/7.6	**M3AA**	**160 L**	3540/1765	89.7/84.5	0.91/0.77	25/16	8.2/6.2	41/41	2.0/2.2	2.2/2.5	0.057	100
18.2/9.1	**M3AA**	**180 L**	3545/1765	88.9/83.7	0.91/0.77	30/19	7.9/5.3	49/49	2.2/1.9	2.4/2.1	0.108	151
23/12.7	**M3AA**	**200 MLA**	3560/1775	90.0/89.0	0.89/0.85	38/22	8.1/7.3	62/68	1.6/1.9	2.9/2.3	0.29	180
30/16.2	**M3AA**	**200 MLB**	3560/1775	91.0/90.0	0.90/0.87	48/28	8.5/7.5	81/87	1.7/2.1	2.9/2.5	0.34	205
37/18.5	**M3AA**	**225 SMB**	3560/1780	91.5/91.5	0.91/0.76	59/36	8.1/7.3	99/99	2.2/3.5	2.6/2.4	0.26	235
40/21	**M3AA**	**225 SMC**	3560/1775	92.0/91.5	0.91/0.79	64/39	8.8/6.5	107/113	2.6/2.9	2.9/2.1	0.29	260
51/25	**M3AA**	**250 SMB**	3565/1785	93.0/93.0	0.91/0.76	80/48	9.1/8.7	137/134	2.0/3.3	2.9/3.0	0.51	330

Data for frame sizes 56 to 80 on request.

Marine aluminum motors, two speed

Technical data, Non-Essential/Essential Services

IP 55 - IC 411 - temperature rise 90 K

Output kW	Motor type	Product code	Speed r/min	Effi-ciency %	Power factor cos φ	Current I_N / A	Current I_s / I_N	Torque T_N / Nm	Torque T_s / T_N	Torque T_{max} / T_N
3000/1500 r/min =2-4 poles			**380 V 50 Hz**		**Constant torque, Dahlander-connection**					
1.3/1	**M3AA 90 S**	3GAA 098 110-••E	2700/1390	66.5/68.5	0.90/0.82	3.3/2.7	3.5/3.4	4.5/6.8	1.8/1.3	2.0/1.8
1.9/1.5	**M3AA 90 L**	3GAA 098 111-••E	2800/1410	74.5/71.5	0.84/0.78	4.6/4.1	4.6/4.0	6.4/10	2.5/1.8	2.7/2.2
2.3/1.8	**M3AA 100 LA**	3GAA 108 109-••E	2795/1435	68.0/75.0	0.89/0.82	5.8/4.5	4.7/4.6	7.8/12	2.1/1.7	2.5/2.3
3/2.4	**M3AA 100 LB**	3GAA 108 110-••E	2815/1430	77.0/77.0	0.88/0.86	6.7/5.3	5.4/5.5	11.7/15.5	2.2/1.9	2.5/2.5
3.8/2.4	**M3AA 112 M**	3GAA 118 101-••C	2860/1430	81.0/78.0	0.94/0.76	7.5/6.1	6.0/6.2	12.7/16	1.8/2.2	2.2/2.7
4.5/3	**M3AA 132 SB**	3GAA 138 101-••C	2825/1420	79.0/78.0	0.93/0.77	9.2/7.5	5.2/5.9	15.2/20	1.7/2.0	2.0/2.2
6.9/4.6	**M3AA 132 M**	3GAA 138 102-••C	2865/1430	83.0/81.0	0.94/0.77	13.3/11.2	6.8/6.1	23/31	2.2/2.3	2.4/2.5
7.9/5.7	**M3AA 160 MA**	3GAA 168 306-••C	2900/1445	83.0/82.0	0.91/0.71	16/15	4.9/4.2	26/38	1.2/1.7	1.9/1.9
11/7.9	**M3AA 160 M**	3GAA 168 307-••C	2895/1440	85.1/85.1	0.92/0.79	21.5/18	4.9/4.3	36/52	1.3/1.6	1.8/1.7
13.2/9.2	**M3AA 160 L**	3GAA 168 308-••C	2905/1445	86.5/86.2	0.92/0.78	25.5/21	5.5/4.7	43/61	1.4/1.8	2.0/1.9
15.8/10.5	**M3AA 180 M**	3GAA 188 301-••C	2935/1465	88.4/88.1	0.92/0.75	30/24.5	6.9/5.7	51/68	2.0/2.4	2.5/2.4
21/14.9	**M3AA 180 L**	3GAA 188 302-••C	2945/1465	89.9/88.8	0.92/0.74	39/35	8.0/5.8	68/97	2.5/2.6	2.8/2.5
28/21	**M3AA 200 MLA**	3GAA 208 101-••C	2940/1470	89.0/90.5	0.89/0.86	53/41	7.0/6.1	91/136	1.9/2.2	2.5/2.2
34/26	**M3AA 200 MLB**	3GAA 208 102-••C	2950/1470	90.5/91.0	0.84/0.86	69/50	7.0/7.0	110/169	1.8/2.2	2.7/2.4
37/28	**M3AA 225 SMB**	3GAA 228 101-••C	2955/1475	92.5/93.0	0.92/0.88	66/53	7.3/6.7	120/181	1.5/2.0	2.6/2.4
44/35	**M3AA 225 SMC**	3GAA 228 102-••C	2960/1475	92.5/93.0	0.84/0.87	87/65	7.6/7.3	142/227	1.8/2.1	2.9/2.6
60/44	**M3AA 250 SMB**	3GAA 258 101-••C	2940/1475	93.0/93.5	0.93/0.88	105/81	6.8/7.1	195/285	1.5/2.2	2.4/2.6
1500/1000 r/min =4/6 poles			**380 V 50 Hz**		**Constant torque, two separate windings**					
0.8/0.4	**M3AA 90 S**	3GAA 098 216-••E	1420/945	64.5/55.0	0.82/0.66	2.3/1.7	3.5/3.2	5.3/4	1.3/1.6	1.9/2.3
1.2/0.65	**M3AA 90 L**	3GAA 098 217-••E	1420/940	68.5/63.0	0.83/0.67	3.2/2.4	4.0/3.3	8/6.6	1.5/1.5	2.0/2.2
1.5/0.9	**M3AA 100 LA**	3GAA 108 214-••E	1435/955	71.5/64.5	0.86/0.66	3.7/3.2	4.3/3.4	9.9/8.9	1.3/1.3	2.0/2.1
1.8/1	**M3AA 100 LB**	3GAA 108 215-••E	1455/960	74.5/68.0	0.80/0.66	4.6/3.5	5.3/3.9	11/10	1.9/1.6	2.7/2.5
2.4/1.6	**M3AA 112 M**	3GAA 118 202-••C	1445/950	79.0/71.0	0.85/0.77	5.4/4.5	5.7/4.9	15.8/16	1.5/1.4	2.1/2.3
3.3/2.2	**M3AA 132 S**	3GAA 138 223-••C	1465/980	82.0/74.0	0.85/0.70	7.3/6.3	6.3/6.0	22/21	1.3/1.1	2.2/2.2
4.2/2.9	**M3AA 132 M**	3GAA 138 224-••C	1470/975	82.0/78.0	0.85/0.70	9.1/7.9	7.0/5.4	27/28	1.4/1.4	2.2/2.4
6.6/4.8	**M3AA 160 M**	3GAA 168 361-••C	1470/970	84.8/80.0	0.79/0.72	14.5/12	7.5/5.0	43/47	2.2/1.7	3.0/2.1
10/7.4	**M3AA 160 L**	3GAA 168 362-••C	1470/970	86.7/82.7	0.80/0.71	21/18.5	8.0/5.5	65/73	2.5/2.1	3.1/2.4
11.4/7	**M3AA 180 M**	3GAA 188 353-••C	1470/975	87.2/81.4	0.82/0.75	24.5/17.5	6.7/4.5	71/46	1.9/1.4	2.5/1.8
13.2/8.8	**M3AA 180 L**	3GAA 188 354-••C	1475/975	88.4/83.1	0.83/0.74	27.5/22	6.7/4.5	86/86	1.9/1.4	2.5/1.9
16/11	**M3AA 200 MLA**	3GAA 208 204-••C	1475/985	88.5/86.0	0.91/0.86	31/23	7.7/7.7	104/107	2.1/2.6	2.5/2.6
20/13	**M3AA 200 MLB**	3GAA 208 205-••C	1480/985	89.5/86.5	0.89/0.87	38/27	8.1/7.8	129/126	2.4/2.7	2.8/2.6
22/15	**M3AA 200 MLC**	3GAA 208 206-••C	1475/980	89.0/85.5	0.87/0.88	44/30	7.9/6.7	142/146	2.4/2.3	2.7/2.2
28/18	**M3AA 225 SMB**	3GAA 228 203-••C	1480/985	90.0/89.5	0.88/0.86	53/36	8.9/8.4	181/175	2.4/2.5	2.9/2.8
32/21	**M3AA 225 SMC**	3GAA 228 204-••C	1480/985	90.5/90.0	0.88/0.87	62/41	8.5/7.6	206/204	2.2/2.3	2.8/2.6
44/28	**M3AA 250 SMB**	3GAA 258 202-••C	1475/985	92.5/90.5	0.89/0.80	82/60	7.7/7.3	285/271	2.4/3.2	2.7/2.7

Data for frame sizes 56 to 80 on request.

The bullets in the product code indicata choice of mounting arrangement, voltage and frequency, generation code (see ordering information)

Marine aluminum motors, two speed

Technical data, Non-Essential/Essential Services

IP 55 - IC 411 - temperature rise 90 K

Output kW	Motor type		Speed r/min	Effi-ciency %	Power factor cos φ	Current I_N / A	Current I_s / I_N	Torque T_N / Nm	Torque T_s / T_N	Torque T_{max} / T_N	Moment of inertia J=1/4 GD² kgm²	Weight kg
3600/1800 r/min =2-4 poles				**440 V 60 Hz**		**Constant torque, Dahlander-connection**						
1.56/1.2	**M3AA**	**90 S**	3240/1670	66.5/68.5	0.90/0.82	3.3/2.7	3.5/3.4	4.3/6.5	1.7/1.2	1.9/1.7	0.0032	13
2.3/1.8	**M3AA**	**90 L**	3360/1690	74.5/71.5	0.84/0.78	4.6/4.1	4.6/4.0	6.1/9.6	2.3/1.7	2.6/2.1	0.0043	16
2.75/2.2	**M3AA**	**100 LA**	3355/1720	68.0/75.0	0.89/0.82	5.8/4.5	4.7/4.6	7.5/11.5	2.0/1.6	2.4/2.4	0.0069	20
3.6/2.9	**M3AA**	**100 LB**	3380/1715	77.0/77.0	0.88/0.86	6.7/5.3	5.4/5.5	10.5/5.3	2.1/1.8	2.4/2.4	0.0082	23
4.4/2.8	**M3AA**	**112 M**	3460/1730	82.0/80.0	0.94/0.77	7.4/5.9	6.1/6.4	12.1/15.5	1.7/2.1	2.2/2.6	0.012	32
5.2/3.5	**M3AA**	**132 SB**	3425/1720	80.0/80.0	0.93/0.77	9.1/7.4	5.3/5.9	14.5/19.4	1.6/1.9	2.0/2.2	0.016	42
8/5.3	**M3AA**	**132 M**	3465/1730	85.0/83.0	0.94/0.76	13.2/11	6.8/6.2	22/29	2.1/2.2	2.4/2.5	0.022	56
9.1/6.6	**M3AA**	**160 MA**	3500/1745	83.0/82.0	0.91/0.71	16/15	4.9/4.2	25/36	1.1/1.5	1.9/1.9	0.039	73
12.7/9.1	**M3AA**	**160 M**	3495/1740	85.1/85.1	0.92/0.79	21.5/18	4.9/4.3	35/50	1.2/1.4	1.3/1.6	0.054	94
15.2/10.6	**M3AA**	**160 L**	3505/1745	86.5/86.2	0.92/0.78	25.5/21	5.5/4.1	41/58	1.3/1.6	1.4/1.8	0.057	100
18.7/12	**M3AA**	**180 M**	3535/1765	88.4/88.1	0.92/0.75	30/24.5	6.9/5.7	51/65	1.7/2.2	1.9/2.4	0.094	137
24.2/17.1	**M3AA**	**180 L**	3545/1765	89.9/88.8	0.92/0.74	39/35	8.0/5.8	65/93	2.2/2.3	2.5/2.6	0.108	151
32/24	**M3AA**	**200 MLA**	3540/1770	89.0/90.5	0.89/0.86	53/41	7.0/6.1	86/130	1.7/2.0	2.5/2.2	0.29	180
39/30	**M3AA**	**200 MLB**	3550/1770	90.5/91.0	0.84/0.86	69/50	7.0/7.1	105/162	1.6/2.0	2.7/2.4	0.34	205
43/32	**M3AA**	**225 SMB**	3555/1775	92.5/93.0	0.92/0.88	66/52	7.3/6.7	116/172	1.3/1.8	2.5/2.4	0.42	230
51/40	**M3AA**	**225 SMC**	3560/1775	92.5/93.0	0.84/0.87	87/65	7.6/7.3	137/215	1.6/1.9	2.8/2.6	0.49	265
69/51	**M3AA**	**250 SMB**	3540/1775	93.0/93.5	0.93/0.88	105/81	6.8/7.1	188/275	1.3/2.0	2.4/2.5	0.88	335
1800/1200 r/min =4/6 poles				**440 V 60 Hz**		**Constant torque, two separate windings**						
0.95/0.5	**M3AA**	**90 S**	1704/1134	64.5/55.0	0.82/0.66	2.3/1.7	3.5/3.2	5/3.8	1.2/1.5	1.8/2.2	0.0032	13
1.44/0.78	**M3AA**	**90 L**	1704/1128	68.5/63.0	0.83/0.67	3.2/2.4	4.0/3.3	7.7/6.4	1.4/1.4	1.9/2.0	0.0043	16
1.8/1	**M3AA**	**100 LA**	1722/1146	71.5/64.5	0.86/0.66	3.7/3.2	4.3/3.4	9.5/8.5	1.2/1.2	1.9/2.0	0.0069	20
2.2/1.2	**M3AA**	**100 LB**	1746/1152	74.5/68.0	0.80/0.66	4.6/3.5	5.3/3.9	10.5/9.6	1.8/1.5	2.6/2.4	0.0082	23
2.8/1.9	**M3AA**	**112 M**	1745/1150	81.0/74.0	0.85/0.76	5.3/5.4	5.8/4.1	15.3/15.8	1.4/1.3	2.1/2.3	0.018	33
3.7/2.5	**M3AA**	**132 S**	1765/1180	83.0/76.0	0.84/0.68	7/6.1	6.6/6.2	20/20	1.3/1.1	2.2/2.2	0.038	48
4.8/3.3	**M3AA**	**132 M**	1770/1175	84.0/80.0	0.85/0.70	8.8/7.6	7.3/5.7	26/27	1.3/1.3	2.1/2.3	0.048	59
7.6/5.5	**M3AA**	**160 M**	1770/1170	84.8/80.0	0.79/0.72	14.5/12	7.5/5.0	41/45	2.0/1.5	2.2/1.7	0.089	93
11.5/8.5	**M3AA**	**160 L**	1770/1170	86.7/82.7	0.80/0.71	21/18.5	8.0/5.5	62/69	2.2/1.9	2.5/2.1	0.119	117
13.1/8.1	**M3AA**	**180 M**	1770/1175	87.2/81.4	0.82/0.75	24.5/17.5	6.7/4.5	71/66	1.6/0.8	1.8/0.9	0.176	131
15.2/10.1	**M3AA**	**180 L**	1775/1175	88.4/83.1	0.83/0.74	27.5/22	6.7/4.5	82/82	1.7/1.3	1.9/1.4	0.224	159
19/13	**M3AA**	**200 MLA**	1775/1185	88.5/86.0	0.91/0.86	31/23	7.7/7.7	102/105	1.8/2.3	2.4/2.5	0.43	185
23/15	**M3AA**	**200 MLB**	1780/1185	89.5/86.5	0.89/0.87	38/27	8.1/7.8	123/121	2.2/2.4	2.7/2.5	0.49	200
25/17	**M3AA**	**200 MLC**	1775/1180	89.0/85.5	0.87/0.88	44/30	7.9/6.7	135/138	2.2/2.1	2.6/2.2	0.49	200
32/21	**M3AA**	**225 SMB**	1780/1185	90.0/89.5	0.88/0.86	53/36	8.9/8.4	172/169	2.2/2.2	2.9/2.7	0.64	225
37/24	**M3AA**	**225 SMC**	1780/1185	90.5/90.0	0.88/0.87	62/41	8.5/7.6	199/194	2.0/2.1	2.7/2.6	0.75	250
51/32	**M3AA**	**250 SMB**	1775/1185	92.5/90.5	0.89/0.80	82/60	7.7/7.3	275/258	2.1/2.9	2.6/2.7	0.88	335

Data for frame sizes 56 to 80 on request.

Marine aluminum motors, two speed

Technical data, Non-Essential/Essential Services

IP 55 - IC 411 - temperature rise 90 K

Output kW	Motor type	Product code	Speed r/min	Effi-ciency %	Power factor cos φ	Current I_N / A	Current I_s / I_N	Torque T_N / Nm	Torque T_s / T_N	Torque T_{max} / T_N
1500/750 r/min =4/8 poles			**380 V 50 Hz**		**Constant torque, two separate windings**					
0.55/0.25	**M3AA 90 S**	3GAA 098 219-••E	1445/695	58.0/48.5	0.8/0.60	2/1.3	3.8/2.1	3.6/3.4	1.1/1.2	2.0/1.9
0.65/0.37	**M3AA 90 L**	3GAA 098 220-••E	1450/695	65.0/54.0	0.76/0.58	2/1.8	4.3/2.3	4.3/5	1.4/1.3	2.5/2.0
1.1/0.55	**M3AA 100 LA**	3GAA 108 217-••E	1460/705	66.0/58.5	0.78/0.62	3/2.3	4.2/2.4	7.8/7.4	1.2/1.0	2.3/1.7
1.3/0.65	**M3AA 100 LB**	3GAA 108 218-••E	1440/700	71.0/60.0	0.82/0.60	3.4/2.7	4.8/2.8	8.5/8.7	1.3/1.2	2.3/2.0
1.7/0.9	**M3AA 112 M**	3GAA 118 203-••C	1460/710	76.0/66.0	0.86/0.71	3.9/2.9	6.9/4.1	11.1/12.1	1.1/1.4	2.1/2.1
2.5/1.3	**M3AA 132 S**	3GAA 138 225-••C	1470/730	80.0/70.0	0.82/0.62	5.9/4.6	6.1/4.3	16.2/17	1.4/1.3	2.3/2.4
3.3/1.7	**M3AA 132 M**	3GAA 138 226-••C	1470/725	81.0/71.0	0.86/0.70	7.3/5.2	7.4/4.6	21/22	1.6/1.6	2.4/2.0
4.8/2.4	**M3AA 160 M**	3GAA 168 363-••C	1465/730	83.6/70.1	0.82/0.57	11/9.5	6.5/4.0	31/31	1.8/1.8	2.5/2.3
7.9/4	**M3AA 160 L**	3GAA 168 364-••C	1465/730	86.3/72.6	0.82/0.56	17/15	7.0/4.2	52/52	2.1/2.1	2.7/2.4
12.3/6.2	**M3AA 180 L**	3GAA 188 356-••C	1475/735	88.1/76.2	0.82/0.56	26/22	7.1/4.0	80/81	2.0/1.8	2.7/2.2
16/8.3	**M3AA 200 MLA**	3GAA 208 207-••C	1475/730	89.5/82.5	0.85/0.65	32/24	7.6/4.4	104/109	2.3/1.9	2.6/1.8
19/9.7	**M3AA 200 MLB**	3GAA 208 208-••C	1480/735	90.5/83.0	0.84/0.60	38/30	8.8/4.8	123/126	2.7/2.5	3.0/2.3
25/12.3	**M3AA 225 SMB**	3GAA 228 205-••C	1480/735	90.0/85.5	0.85/0.61	50/36	7.8/5.0	161/160	2.1/2.5	2.7/2.3
30/15	**M3AA 225 SMC**	3GAA 228 206-••C	1480/735	92.0/87.0	0.86/0.66	59/40	8.1/4.9	194/195	2.2/2.3	2.8/2.0
44/22	**M3AA 250 SMB**	3GAA 258 203-••C	1480/740	92.5/88.0	0.87/0.60	83/63	8.8/6.2	284/284	2.7/3.6	3.1/3.0
1500/750 r/min =4-8 poles			**380 V 50 Hz**		**Constant torque, Dahlander connection**					
0.7/0.34	**M3AA 90 S**	3GAA 098 113-••E	1410/700	68.5/49.0	0.82/0.57	1.9/1.8	4.0/2.3	4.7/4.7	1.4/1.6	2.0/2.2
1/0.45	**M3AA 90 L**	3GAA 098 114-••E	1390/690	71.0/53.0	0.85/0.58	2.5/2.3	4.1/2.5	6.7/6.2	1.4/1.6	2.0/2.3
1.5/0.75	**M3AA 100 LA**	3GAA 108 112-••E	1435/705	73.0/58..0	0.87/0.58	3.6/3.4	4.2/2.5	10/10	1.2/1.3	2.0/2.0
2/0.9	**M3AA 100 LB**	3GAA 108 113-••E	1435/710	75.0/62.0	0.88/0.56	4.6/4	4.4/2.8	13/11.3	1.2/1.5	2.0/2.2
2.2/1.3	**M3AA 112 M**	3GAA 118 103-••C	1425/710	78.0/67.0	0.89/0.64	4.7/4.6	5.7/4.1	14.7/17.5	1.4/1.5	2.1/2.5
3.6/1.8	**M3AA 132 S**	3GAA 138 125-••C	1450/730	83.0/72.0	0.87/0.55	7.6/6.9	5.4/3.9	24/24	1.3/1.2	2.0/2.6
5/2.5	**M3AA 132 M**	3GAA 138 126-••C	1450/730	84.0/75.0	0.89/0.57	10.1/9	6.2/4.8	33/33	1.5/1.8	2.1/2.5
7/4	**M3AA 160 M**	3GAA 168 309-••C	1440/725	84.1/76.1	0.86/0.60	15/13.5	4.6/3.4	46/53	1.3/1.3	1.8/1.8
10.5/6.2	**M3AA 160 L**	3GAA 168 310-••C	1445/725	86.5/78.4	0.86/0.59	21.5/20.5	5.2/3.5	69/82	1.5/1.4	2.0/1.9
14/7	**M3AA 180 L**	3GAA 188 304-••C	1460/730	88.4/79.8	0.86/0.54	28.5/25	4.8/3.5	92/92	1.2/1.4	1.8/2.0
19/11	**M3AA 200 MLA**	3GAA 208 107-••C	1475/735	87.5/86.0	0.81/0.69	41/29	6.8/6.3	123/143	2.1/2.7	2.7/2.9
22/13	**M3AA 200 MLB**	3GAA 208 108-••C	1475/735	89.0/86.0	0.86/0.67	44/35	7.8/6.2	142/169	2.3/2.7	2.8/2.8
26/15	**M3AA 200 MLC**	3GAA 208 109-••C	1475/735	90.0/88.0	0.91/0.75	49/35	7.2/6.2	168/195	2.2/2.7	2.4/2.5
31/19	**M3AA 225 SMB**	3GAA 228 105-••C	1475/735	90.0/89.0	0.90/0.74	59/45	6.8/5.8	201/247	1.7/2.1	2.2/2.3
37/22	**M3AA 225 SMC**	3GAA 228 106-••C	1475/735	91.0/89.5	0.91/0.75	69/50	7.0/6.1	240/286	1.8/2.2	2.3/2.3
48/29	**M3AA 250 SMB**	3GAA 258 103-••C	1480/740	92.0/90.5	0.90/0.75	89/66	7.5/6.6	310/374	2.2/2.6	2.6/2.6
1000/750 r/min =6-8 poles			**380 V 50 Hz**		**Constant torque, two spearate windings**					
1.6/0.8	**M3AA 112 M**	3GAA 118 207-••C	965/720	73.1/61.0	0.72/0.68	4.4/2.9	5.5/4.3	14.9/10.6	2.2/2.1	2.5/2.2
2.5/1.2	**M3AA 132 S**	3GAA 138 213-••C	975/730	77.6/63.9	0.74/0.66	6.6/4.3	6.3/4.2	24.5/15.7	1.5/1.5	2.6/2.2
3.2/1.5	**M3AA 132 M**	3GAA 138 214-••C	975/730	79.1/66.1	0.73/0.68	8.4/5.0	7.1/5.1	31.3/19.6	1.9/1.8	2.8/2.4

Data for frame sizes 56 to 80 on request.

The bullets in the product code indicata choice of mounting arrangement, voltage and frequency, generation code (see ordering information)

Marine aluminum motors, two speed

Technical data, Non-Essential/Essential Services

IP 55 - IC 411 - temperature rise 90 K

Output kW	Motor type		Speed r/min	Effi-ciency %	Power factor cos φ	Current I_N / A	Current I_s / I_N	Torque T_N / Nm	Torque T_s / T_N	Torque T_{max} / T_N	Moment of inertia J=1/4 GD² kgm²	Weight kg
1800/900 r/min =4/8 poles				**440 V 60 Hz**		**Constant torque, two separate windings**						
0.6/0.3	**M3AA**	**90 S**	1734/834	52.0/48.5	0.80/0.60	2/1.3	3.8/2.1	3.5/3.3	1.0/1.1	1.9/1.8	0.0032	13
0.7/0.4	**M3AA**	**90 L**	1740/834	65.0/54.0	0.76/0.58	2/1.3	3.8/2.1	3.5/3.3	1.0/1.1	1.9/1.8	0.0043	16
1.2/0.66	**M3AA**	**100 LA**	1752/846	66.0/58.5	0.78/0.62	3/2.3	4.2/2.4	7.5/7.1	1.1/1.0	2.3/1.6	0.0069	20
1.56/0.78	**M3AA**	**100 LB**	1728/840	71.0/60.0	0.82/0.60	3.4/2.7	4.8/2.8	8.1/8.3	1.2/1.1	2.2/1.9	0.0082	23
2/1.1	**M3AA**	**112 M**	1760/860	78.0/80.0	0.86/0.71	3.9/2.9	6.9/4.1	10.9/12.2	1.1/1.3	2.0/1.9	0.018	32
2.9/1.5	**M3AA**	**132 S**	1770/880	82.0/73.0	0.81/0.61	5.8/4.4	6.2/4.5	15.6/16.3	1.4/1.3	2.2/2.3	0.038	48
3.8/1.9	**M3AA**	**132 M**	1770/875	83.0/74.0	0.85/0.68	7.1/5	7.6/4.8	21/21	1.6/1.6	2.3/2.0	0.048	59
5.5/2.8	**M3AA**	**160 M**	1765/880	83.6/70.1	0.82/0.57	11/9.5	6.5/4.0	30/30	1.6/1.6	2.5/2.2	0.089	92
9.1/4.6	**M3AA**	**160 L**	1765/880	86.3/72.6	0.82/0.56	17/15	7.0/4.2	49/50	1.9/1.9	2.7/2.4	0.119	117
14.1/7.1	**M3AA**	**180 L**	1775/885	88.1/76.2	0.82/0.56	26/22	7.1/4.0	76/77	1.8/1.6	2.7/2.2	0.225	159
19/9.6	**M3AA**	**200 MLA**	1775/880	89.5/82.5	0.85/0.65	32/24	7.6/4.4	102/104	2.0/1.7	2.5/1.8	0.29	180
22/11.2	**M3AA**	**200 MLB**	1780/885	90.5/83.0	0.84/0.60	38/30	8.8/4.8	118/121	2.4/2.2	2.9/2.2	0.34	205
29/14.2	**M3AA**	**225 SMB**	1780/885	90.0/85.5	0.85/0.61	50/36	7.8/5.0	156/153	1.9/2.2	2.6/2.3	0.42	230
35/17.4	**M3AA**	**225 SMC**	1780/885	92.0/87.0	0.86/0.66	58/40	8.1/4.9	188/188	1.9/2.0	2.7/1.9	0.49	265
51/25	**M3AA**	**250 SMB**	1780/890	92.5/88.0	0.87/0.60	83/63	8.8/6.2	274/268	2.4/3.3	3.0/3.0	0.89	335
1800/900 r/min =4-8 poles				**440 V 60 Hz**		**Constant torque, Dahlander connection**						
0.84/0.4	**M3AA**	**90 S**	1692/840	68.5/49.0	0.82/0.57	1.9/1.8	4.0/2.3	4.5/4.5	1.3/1.5	1.9/2.1	0.0032	13
1.2/0.54	**M3AA**	**90 L**	1668/828	71.0/53.0	0.85/0.58	2.5/2.3	4.1/2.5	6.4/5.9	1.3/1.5	1.9/2.2	0.0043	16
1.8/0.9	**M3AA**	**100 LA**	1722/846	73.0/58.0	0.87/0.58	3.6/3.4	4.2/2.5	9.6/9.6	1.1/1.2	1.9/1.9	0.0069	20
2.4/1	**M3AA**	**100 LB**	1722/852	75.0/62.0	0.88/0.56	4.6/4	4.4/2.8	12.5/10.8	1.1/1.4	1.9/2.1	0.0082	23
2.5/1.5	**M3AA**	**112 M**	1730/860	81.0/70.0	0.88/0.63	4.6/4.4	5.9/4.3	13.8/16.7	1.3/1.4	2.1/2.5	0.018	32
4.2/2.1	**M3AA**	**132 S**	1745/880	85.0/75.0	0.87/0.55	7.5/6.6	5.5/4.1	23/23	1.2/1.1	1.9/2.5	0.038	48
5.8/2.9	**M3AA**	**132 M**	1750/880	86.0/78.0	0.89/0.57	10/8.6	6.3/5.0	32/32	1.5/1.7	2.0/2.4	0.048	59
8/4.6	**M3AA**	**160 M**	1740/875	84.1/76.1	0.86/0.60	15/13.5	4.6/3.4	44/50	1.2/1.2	1.8/1.8	0.089	92
12.1/7.1	**M3AA**	**160 L**	1745/875	86.5/78.4	0.86/0.59	21.5/20.5	5.2/3.5	66/78	1.3/1.3	2.0/1.9	0.119	117
16.1/8	**M3AA**	**180 L**	1760/880	88.4/79.8	0.86/0.54	28.5/25	4.8/3.5	87/87	1.1/1.3	1.8/2.0	0.224	159
22/12.7	**M3AA**	**200 MLA**	1775/885	87.5/86.0	0.81/0.69	41/28	6.8/6.3	118/137	1.9/2.4	2.6/2.8	0.37	165
25/15	**M3AA**	**200 MLB**	1775/885	89.0/86.0	0.86/0.67	44/35	7.8/6.3	135/162	2.1/2.4	2.8/2.7	0.43	185
30/17.4	**M3AA**	**200 MLC**	1775/885	90.0/88.0	0.91/0.75	49/35	7.3/6.2	161/188	2.0/2.4	2.3/2.4	0.49	200
36/22	**M3AA**	**225 SMB**	1775/885	90.0/89.0	0.90/0.74	59/45	6.8/5.8	194/238	1.5/1.9	2.1/2.2	0.64	225
43/25	**M3AA**	**225 SMC**	1775/885	91.0/89.5	0.91/0.75	69/50	7.0/6.1	231/270	1.6/2.0	2.2/2.3	0.75	250
56/34	**M3AA**	**250 SMB**	1780/890	92.0/90.5	0.90/0.75	89/66	7.6/6.6	301/365	1.9/2.3	2.5/2.5	1.49	320
1200/900 r/min =6-8 poles				**440 V 60 Hz**		**Constant torque, Dahlander connection**						
1.8/0.9	**M3AA**	**112 M**	1165/870	75.7/64.2	0.72/0.65	4.3/2.8	5.7/5.9	14.8/9.9	2.0/2.3	2.6/2.0	0.015	35
2.9/1.5	**M3AA**	**132 S**	1175/880	79.9/67.5	0.74/0.67	6.4/4.3	6.6/4.4	23.6/16.3	1.5/1.5	2.8/2.3	0.04	48
3.7/1.7	**M3AA**	**132 M**	1175/880	81.1/68.9	0.73/0.66	8.2/4.9	7.5/5.6	30/18.4	1.8/1.8	2.9/2.6	0.041	48

Data for frame sizes 56 to 80 on request.

Marine aluminum motors - Variant codes

Code [1]	Variant	Motor size			M2AA			M3AA			
		56-63	71-80	90-100	112-132	160-200	225-250	112-132	160-180	200-250	280
Balancing											
052	Vibration acc. to grade A (IEC 60034-14).	P	P	P	S	S	S	S	S	S	S
417	Vibration acc. to grade B (IEC 60034-14).	NA	NA	NA	R	R	R	R	R	R	R
423	Balanced without key.	P	P	P	R	R	R	R	R	R	R
424	Full key balancing.	P	P	P	P	P	P	P	P	P	P
Bearings and lubrication											
036	Transport lock for bearings.	NA	NA	M	M	M	M	M	M	M	M
037	Roller bearing at D-end.	NA	NA	M	NA	M	M	NA	M	M	M
039	Cold resistant grease Sizes 56-100; ambient temperatures -30... +40°C. Sizes 112-280; ambient temperatures -40…+100°C.	M	M	M	M	M	M	M	M	M	M
040	Heat resistant grease Sizes 56-100; ambient temperatures -20...+160°C. Sizes 112-280; ambient temperatares -40…+100°. Mandatory for ambient temperatures > 50°C.	M	M	M	S	S	S	S	S	S	S
041	Bearings regreasable via grease nipples.	NA	NA	M	M	M	S	M	M	S	S
042	Locked drive-end. Standard for sizes 90-132, flanged versions.	NA	M	S	M	S	S	M	S	S	S
043	SPM nipples.	NA	NA	R	M	M	M	M	M	M	M
057	2RS bearings at both ends. Grease for bearing temperatures -20 - +110° C.	M	M	M	M	R	R	M	M	M	M
058	Angular contact ball bearing at D-end, shaft force away from bearing. Transport lock included.	NA	NA	M	M	R	R	M	M	M	M
059	Angular contact ball bearing at N-end, shaft force towards bearing. Transport lock included.	NA	NA	M	M	R	R	M	M	M	M
107	Pt-100 2-wire in bearings.	NA	NA	NA	NA	NA	NA	NA	R	R	R
188	63-series bearings.	NA	NA	M	M	S	S	M	S	S	S
796	Grease nipples JIS B 1575 Pt 1/8 Type A. Stainless steel. Head type to be defined when ordering.	NA	NA	NA	M	M	M	M	M	M	M
797	Stainless steel SPM nipples.	NA	NA	NA	M	M	M	M	M	M	M
798	Stainless steel grease nipples.	NA	NA	NA	M	M	M	M	M	M	M
Branch standard designs											
178	Stainless steel/acid proof bolts.	M	M	M	M	M	M	M	M	M	M
209	Non-standard voltage or frequency (special winding).	P	P	P	P	P	P	P	P	P	P
425	Corrosion protected stator and rotor core.	P	P	P	P	R	R	P	P	P	P
Cooling system											
053	Metal fan cover. The dimension L1 and L2 respectively is increased by 7.5 mm for the frame size 112 and 5.5 mm for the frame size 132.	S	S	S	M	S	S	M	S	S	S
068	Metal fan. Mandatory for ambient temperatures: For sizes 71-100 > 80°C, sizes 112-132 > 50°C, sizes 160-280 > 80°C."	NA	M	M	M	M	M	M	M	M	M
075	Cooling method IC418 (without fan).	P	P	P	R	R	R	R	R	R	R
183	Separate motor cooling (fan axial, N-end).	NA	M	M	NA	R	R	NA	M	M	M
189	Separate motor cooling, IP44, 400V 50Hz (fan axial, N-end).	NA	NA	NA	M	M	M	M	M	M	M

[1] Certain variant codes cannot be used simultaneously.

S = Included as standard.
M = On modification of a stocked motor, or on new manufacture, the number per order may be limited.
P = New manufacture only.
R = On request.
NA = Not applicable.

Code [1]	Variant	Motor size			M2AA			M3AA			
		56-63	71-80	90-100	112-132	160-200	225-250	112-132	160-180	200-250	280
Dimension drawing											
141	Binding dimension drawing	M	M	M	M	M	M	M	M	M	M
Drain holes											
065	Plugged existing drain holes.	M	M	M	M	M	M	M	M	M	M
076	Drain holes with plugs.	S	S	NA	NA	NA	NA	NA	NA	NA	NA
Earthing bolt											
067	External earthing bolt.	M	M	M	M	M	M	M	M	M	M
Hazardous environments											
	See catalogue 'Motors for Hazardous Environments' for details.										
Heating elements											
450	Heating element, 100-120 V.	M	M	M	M	M	M	M	M	M	M
451	Heating element, 200-240 V.	M	M	M	M	M	M	M	M	M	M
Insulation system											
014	Winding insulation class H.	P	P	P	P	R	R	P	P	P	P
405	Special winding insulation for frequency converter supply.	NA	NA	R	P	R	R	P	P	P	P
406	Winding for supply > 690 ≤ 1000 V.	NA	NA	NA	R	R	R	R	R	P	P
Mounting arrangements											
007	IM 3001 flange mounted, IEC flange, from IM 1001 (B5 from B3). Frame size 160 not available.	NA	M	M	NA	M/ NA	M	NA	NA	M	M
008	IM 2101 foot/flange mounted, IEC flange, from IM 1001 (B34 from B3). Frame size 160 available.	NA	M	M	M	M/ NA	NA	M	M/ NA	NA	NA
009	IM 2001 foot/flange mounted, IEC flange, from IM 1001 (B35 from B3).	M	M	M	M	M	M	M	M	M	M
047	IM 3601 flange mounted, IEC flange, from IM 3001 (B14 from B5). Frame size 160 available.	M	M	M	M	M/ NA	NA	M	M/ NA	NA	NA
048	IM 3001 flange mounted, IEC flange, from IM 3601 (B5 from B14).	M	M	M	M	NA	NA	M	NA	NA	NA
066	Modified for non-standard mounting position. (please specify IM xxxx). Must be ordered for all mounting arrangements excluding IM B3 (1001) and B5 (3001).	M	M	M	M	M	M	M	M	M	M
078	IM 3601 flange mounted, DIN C-flange. Small flange with clearance holes. Larger flange than standard version.	NA	NA	R	NA	NA	NA	NA	NA	NA	NA
080	IM 3001 flange mounted, DIN A-flange. Large flange with clearance holes. Larger flange than standard version.	NA	NA	R	NA	NA	NA	NA	NA	NA	NA
090	IM 2101 foot/flange mounted, DIN C-flange, from IM 1001 (B34 from B3).	NA	NA	R	NA	NA	NA	NA	NA	NA	NA
091	IM 2001 foot/flange mounted, DIN A-flange, from IM 1001 (B35 from B3).	NA	NA	R	NA	NA	NA	NA	NA	NA	NA
200	Flange ring holder.	NA	M	M	R	NA	NA	R	R	R	R
217	Cast iron D-end shield (on foot-mounted aluminum motor).	NA	NA	M	R	R	R	R	M	M	M
218	Flange ring FT 85.	NA	M	M/ NA	NA	NA	NA	NA	NA	NA	NA
219	Flange ring FT 100.	NA	M	M	NA	NA	NA	NA	NA	NA	NA
220	Flange ring FF 100.	NA	M	M	NA	NA	NA	NA	NA	NA	NA
223	Flange ring FF 115.	NA	M	M	NA	NA	NA	NA	NA	NA	NA
224	Flange ring FT 115.	NA	M	M	NA	NA	NA	NA	NA	NA	NA

[1] Certain variant codes cannot be used simultaneously.

S = Included as standard.
M = On modification of a stocked motor, or on new manufacture, the number per order may be limited.
P = New manufacture only.
R = On request.
NA = Not applicable.

Code [1]	Variant	Motor size			M2AA			M3AA			
		56-63	71-80	90-100	112-132	160-200	225-250	112-132	160-180	200-250	280
226	Flange ring FF 130.	NA	M	M	NA	NA	NA	NA	NA	NA	NA
227	Flange ring FT 130.	NA	M	M	NA	NA	NA	NA	NA	NA	NA
233	Flange ring FF 165.	NA	M	M	NA	NA	NA	NA	NA	NA	NA
234	Flange ring FT 165.	NA	M	M	NA	NA	NA	NA	NA	NA	NA
243	Flange ring FF 215.	NA	NA	M	NA	NA	NA	NA	NA	NA	NA
244	Flange ring FT 215.	NA	NA	M	NA	NA	NA	NA	NA	NA	NA
Painting											
114	Special paint colour, standard grade. RAL-colour no. must be specified.	M	M	M	M	M	M	M	M	M	M
179	Special paint specification.	R	R	R	R	R	R	R	R	R	R
Protection											
005	Metal protective roof, vertical motor, shaft down.	M	M	M	M	M	M	M	M	M	M
072	Radial seal at D-end.	M	M	M	M	R	M	M	M	M	M
073	Sealed against oil at D-end.	M	M	NA	NA	NA	NA	NA	NA	NA	NA
158	Degree of protection IP65. Dust proof version.	M	M	P	M	M	M	M	M	M	M
211	Weather protected, IP xx W.	NA	NA	P	P	P	P	P	P	P	P
403	Degree of protection IP 56.	M	M	M	M	M	M	M	M	M	M
784	Gamma-seal at D-end.	NA	NA	M	R	R	R	M	M	M	M
Rating and instruction plates											
002	Restamping voltage, frequency and output, continuous duty.	M	M	M	M	M	M	M	M	M	M
003	Individual serial number.	P	P	M	M	M	M	M	M	M	M
004	Additional text on standard rating plate.	NA	NA	NA	M	M	M	M	M	M	M
095	Restamping output (maintained voltage, frequency), intermittent duty.	M	M	M	M	M	M	M	M	M	M
098	Stainless rating plate.	M	M	M	M	R	R	M	M	M	M
135	Mounting of additional identification plate, stainless.	NA	NA	M	R	NA	NA	R	R	R	R
138	Mounting of additional identification plate, aluminum.	M	M	M	M	M	M	M	M	M	M
139	Additional indentification plate delivered loose.	M	M	M	M	M	M	M	M	M	M
160	Additional rating plate affixed.	R	R	M	M	M	M	M	M	M	M
161	Additional rating plate delivered loose.	M	M	M	M	M	M	M	M	M	M
162	Rating plate fixed to stator.	NA	NA	S	M	S	S	M	S	S	S
163	Frequency converter rating plate. Rating data according to quotation.	NA	NA	NA	M	M	M	M	M	M	M
Shaft and rotor											
069	Two shaft extensions as per basic catalogue.	P	P	P	P	R	R	P	P	P	P
070	One or two special shaft extensions, std shaft material.	R	R	R	R	R	R	R	R	R	R
165	Shaft extension with open key-way.	P	P	P	P	NA	NA	P	P	P	P
410	Stainless steel shaft (standard or non-std design).	P	P	R	R	R	R	R	R	R	R
Standards and regulations											
024	Fulfilling Bureau Veritas (BV) requirements, Essential Service.	M	M	M	M	M	M	M	M	M	M
025	Fulfilling Det Norske Veritas (DNV) requirements, Essential Service	M	M	M	M	M	M	M	M	M	M
026	Fulfilling Lloyds Register of Shipping (LR) requirements, Essential Service.	M	M	M	M	M	M	M	M	M	M
027	Fulfilling American Bureau of Shipping (ABS) requirements, Essential Service.	M	M	M	M	M	M	M	M	M	M

[1] Certain variant codes cannot be used simultaneously.

S = Included as standard.
M = On modification of a stocked motor, or on new manufacture, the number per order may be limited.
P = New manufacture only.
R = On request.
NA = Not applicable.

Code [1]	Variant	Motor size			M2AA			M3AA			
		56-63	71-80	90-100	112-132	160-200	225-250	112-132	160-180	200-250	280
049	Fulfilling Germanischer Lloyd (GL) requirements, Essential Service.	M	M	M	M	M	M	M	M	M	M
050	Fulfilling Registro Italiano Navale (RINA) requirements, Essential Service.	M	M	M	M	M	M	M	M	M	M
051	Fulfilling Russian Maritime Register of Shipping (RS) requirements, Essential Service.	M	M	M	M	M	M	M	M	M	M
096	Fulfilling Lloyds Register of Shipping (LR) Non-Essential Service	M	M	M	NA	NA	M	NA	NA	M	M
186	Fulfilling Det Norske Veritas (DNV) requirements Non-Essential Service	M	M	M	NA	NA	M	NA	NA	M	M
481	Fulfilling Nippon Kaiji Kyokai (NK) requirements, Essential Service.	P	P	M	M	M	M	M	M	M	M
483	Fulfilling China Classification Societies (CCS) requirements (Beijing), Essential Service.	P	P	M	M	M	M	M	M	M	M
484	Fulfilling Korea Register of Shipping (KR) requirements, Essential Service.	P	P	M	M	M	M	M	M	M	M
485	Fulfilling China Corporational Register of Shipping (CR) requirements (Taipei), Essential Service.	P	P	M	M	M	M	M	M	M	M
491	Fulfilling Nippon Kaiji Kyokai (NK) requirements, Non-Essential Service.	M	M	M	M	M	M	M	M	M	M
492	Fulfilling Registro Italiano Navale (RINA) requirements, Non-Essential Service.	M	M	M	M	M	M	M	M	M	M
493	Fulfilling China Classification Societies (CCS) Requirements (Beijing), Non-Essential Service.	P	P	M	M	M	M	M	M	M	M
494	Fulfilling Korea Register of Shipping (KR) requirements, Non-Essential Service.	P	P	M	M	M	M	M	M	M	M
495	Fulfilling China Corporational Register of Shipping (CR) requirements (Taipei), Non-Essential Service.P	P	M	M	M	M	M	M	M	M	
496	Fulfilling Bureau Veritas (BV) requirements, Non-Essential Service.	M	M	M	M	M	M	M	M	M	M
497	Fulfilling Russian Maritime Register of Shipping (RS) requirements, Non-Essential Service.	M	M	M	M	M	M	M	M	M	M
778	GOST R Export/Import Certificate (Russia)	NA	NA	NA	M	M	M	M	M	M	M
779	SASO Export/Import Certificate (Saudi Arabia)	NA	NA	NA	M	M	M	M	M	M	M
Stator winding temperature sensors											
	Breaking capacity for bimetal detector: Sizes 71-100: 2 A at 380 V ac, 5 A at 240 V ac, 2.5 A at 24 V dc Sizes 112-250: 4 A at 250 V ac, 3 A at 60 V dc Sizes 280-400: 24 A at 250 V										
121	Bimetal detectors, break type (NCC), (3 in series), 130°C, in stator winding.	M	M	M	M	M	M	M	M	M	M
122	Bimetal detectors, break type (NCC), (3 in series), 150°C, in stator winding.	M	M	M	M	M	M	M	M	M	M
123	Bimetal detectors, break type (NCC), (3 in series), 170°C, in stator winding.	M	M	M	M	M	M	M	M	M	M
124	Bimetal detectors, break type (NCC), (2x3 in series), 140°C, in stator winding.	NA	NA	NA	M	M	M	M	M	M	M
125	Bimetal detectors, break type (NCC), (2x3 in series), 150°C, in stator winding.	M	M	M	M	M	M	M	M	M	M

[1] Certain variant codes cannot be used simultaneously.

S = Included as standard.
M = On modification of a stocked motor, or on new manufacture, the number per order may be limited.
P = New manufacture only.
R = On request.
NA = Not applicable.

Code [1]	Variant	Motor size			M2AA			M3AA			
		56-63	71-80	90-100	112-132	160-200	225-250	112-132	160-180	200-250	280
127	Bimetal detectors, break type (NCC), (3 in series 130°C & 3 in series, 150°C), in stator winding.	M	M	M	M	M	M	M	M	M	M
321	Bimetal detectors, closing type (NO), (3 in parallel), 130°C, in stator winding.	NA	NA	P	R	NA	NA	R	R	R	R
322	Bimetal detectors, closing type (NO), (3 in parallel), 150°C, in stator winding.	NA	NA	P	R	R	R	R	R	R	R
323	Bimetal detectors, closing type (NO), (3 in parallel), 170°C, in stator winding.	NA	NA	P	R	R	R	R	R	R	R
325	Bimetal detectors, closing type (NO), (2x3 in parallel), 150°C, in stator winding.	NA	NA	P	R	R	R	R	R	R	R
435	PTC-thermistors (3 in series), 130°C, 3 in stator winding.	M	M	M	M	M	M	M	M	M	M
436	PTC-thermistors (3 in series), 150°C, in stator winding.	M	M	M	M	M	S	M	M	S	S
437	PTC-thermistors (3 in series), 170°C, in stator winding.	M	M	M	M	M	M	M	M	M	M
439	PTC-thermistors (2x3 in series), 150°C, in stator winding.	M	M	M	M	M	M	M	M	M	M
440	PTC-thermistors (3 in series, 110°C & 3 in series, 130°C), in stator winding.	M	M	M	R	R	R	R	R	R	R
441	PTC-thermistors (3 in series, 130°C & 3 in series, 150°C), in stator winding.	M	M	M	M	M	M	M	M	M	M
442	PTC-thermistors (3 in series, 150°C & 3 in series, 170°C), in stator winding.	M	M	R	M	M	M	M	M	M	M
445	Pt-100 2-wire in stator winding. 1 per phase.	NA	NA	R	M	M	M	M	M	M	M
446	Pt-100 2-wire in stator winding, 2 per phase.	NA	NA	R	NA	M	M	NA	M	M	M
Terminal box											
015	Motor supplied in D-connection.	M	M	M	M	M	M	M	M	M	M
017	Motor supplied in Y-connection.	M	M	M	M	M	M	M	M	M	M
019	Larger than standard terminal box. Standard for frame size 280, and for sizes 200-250 by voltage code S.	NA	NA	NA	M	M	M	M	M	M	NA
021	Terminal box LHS, seen from D-end (= L prod.code).	NA	M	M	NA	NA	R	NA	NA	M	M
180	Terminal box on RHS, seen from D-end (= R prod.code).	NA	M	M	NA	NA	R	NA	NA	M	M
112	Mounting of plug-in contact.	R	R	R	R	NA	NA	R	NA	NA	NA
136	Extended cable connection, standard terminal box. 2 m long connection table.	P	P	R	R	R	R	R	R	R	R
230	Standard metal cable glands.	M	M	M	M	M	M	M	M	M	M
402	Terminal box adapted for Al cables.	NA	NA	NA	NA	NA	R	NA	NA	P	P
418	Separate terminal box for auxiliaries, standard material.	NA	NA	R	M	M	M	M	M	M	M
467	Lower than standard terminal box and rubber extended cable. Terminal box without screw terminals and extended rubber connection cable, 2 m.	NA	NA	NA	P	R	R	P	P	P	P
376	Two standard plastic cable glands.	M	M	M	M	NA	NA	M	NA	NA	NA
731	Two standard metal cable glands.	M	M	M	M	M	M	M	M	M	M
Testing											
140	Test confirmation.	M	M	M	M	M	M	M	M	M	M
145	Type test report from a catalogue motor, 400 V 50 Hz.	M	M	M	M	M	M	M	M	M	M

[1] Certain variant codes cannot be used simultaneously.

S = Included as standard.
M = On modification of a stocked motor, or on new manufacture, the number per order may be limited.
P = New manufacture only.
R = On request.
NA = Not applicable.

Code [1]	Variant	Motor size			M2AA			M3AA			
		56-63	71-80	90-100	112-132	160-200	225-250	112-132	160-180	200-250	280
146	Type test with report for motor from specific delivery batch.	P	P	M	M	M	M	M	M	M	M
147	Type test report with motor from specific delivery batch, customer witnessed.	P	P	M	M	M	M	M	M	M	M
148	Routine test report.	P	P	M	M	M	M	M	M	M	M
149	Test according to separate test specification.	NA	NA	R	R	R	R	R	R	R	R
153	Reduced test for classification society.	M	M	M	M	M	M	M	M	M	M
221	Type test and multi-point load test with report for motor from specific delivery batch.	R	R	M	M	M	M	M	M	M	M
222	Torque/speed curve, type test and multi-point load test with report from specific delivery batch.	R	R	M	M	M	M	M	M	M	M
760	Vibration level test.	R	R	M	M	M	M	M	M	M	M
762	Noise level test.	R	R	M	M	M	M	M	M	M	M
764	Complete test with ABB frequency converter available at ABB Motors test field.	NA	NA	R	R	R	R	R	R	R	R
Variable speed drives											
701	Insulated bearing at N-end. For fan and pump duty up to 500V.	NA	NA	NA	NA	NA	NA	NA	NA	M	M
704	EMC cable termination.	NA	NA	NA	M	R	R	M	M	M	M
Separate motor cooling											
183	Separate motor cooling (fan axial, N-end).	NA	M	M	NA	R	R	NA	M	M	M
189	Separate motor cooling, IP44 400V 50Hz (fan axial, N-end).	NA	NA	NA	M	M	M	M	M	M	M
Mounting of tacho; tacho not included											
182	Pulse sensor mounted as specified.	R	R	R	R	NA	NA	R	R	R	R
470	Prepared for hollow shaft pulse tacho (Leine & Linde equivalent).	NA	NA	R	P	R	R	NA	M	M	M
570	Prepared for hollow shaft pulse tacho (L&L 562).	NA	NA	R	P	M	M	P	M	M	M
Mounting of tacho; tacho included											
472	1024 pulse tacho (Leine & Linde 861). Hollow shaft version.	NA	NA	R	P	R	R	P	M	M	M
473	2048 pulse tacho (Leine & Linde 861). Hollow shaft version.	NA	NA	R	P	R	R	P	M	M	M
572	1024 pulse tacho (L&L 503).	NA	NA	R	M	M	M	M	M	M	M
573	2048 pulse tacho (L&L 503).	NA	NA	R	P	M	M	P	M	M	M
Separate motor cooling & prepared for tacho; tacho not included											
474	Separate motor cooling (fan axial, N-end) and prepared for hollow shaft tacho (Leine&Linde equivalent).	NA	NA	R	P	R	R	P	M	M	M
574	Separate motor cooling (fan axial, N-end) and prepared for hollow shaft tacho (L&L 503).	NA	NA	R	NA	R	R	NA	M	M	M
578	Separate motor cooling, IP44, 400V, 50Hz (fan axial, N-end) and prepared for hollow shaft tacho (L&L 503).	NA	NA	R	P	M	M	P	M	M	M
Separate motor cooling & tacho; tacho included											
476	Separate motor cooling (fan axial, N-end) and 1024 pulse tacho (Leine & Linde 861).	NA	NA	R	P	R	R	P	M	M	M
477	Separate motor cooling (fan axial, N-end) and 2048 pulse tacho (Leine&Linde 861).	NA	NA	R	P	R	R	P	M	M	M

[1] Certain variant codes cannot be used simultaneously.

S = Included as standard.
M = On modification of a stocked motor, or on new manufacture, the number per order may be limited.
P = New manufacture only.
R = On request.
NA = Not applicable.

Code [1]	Variant	Motor size			M2AA			M3AA			
		56-63	71-80	90-100	112-132	160-200	225-250	112-132	160-180	200-250	280
576	Separate motor cooling (fan axial, N-end) and 1024 pulse tacho (L&L 503).	NA	NA	R	NA	R	R	NA	M	M	M
577	Separate motor cooling (fan axial, N-end) and 2048 pulse tacho (L&L 503).	NA	NA	R	NA	R	R	NA	M	M	M
580	Separate motor cooling IP44, 400V 50Hz (fan axial, N-end) and 1024 pulse tacho (L&L 503).	NA	NA	R	P	M	M	P	M	M	M
581	Separate motor cooling IP44, 400V 50Hz (fan axial, N-end) and 2048 pulse tacho (L&L 503).	NA	NA	R	P	M	M	P	M	M	M
Y/Δ starting											
117	Terminals for Y/Δ start at both speeds (two-speed separate windings).	NA	NA	P	NA	NA	NA	NA	P	P	P
118	Terminals for Y/Δ start at high speed (two-speed separate windings).	NA	NA	NA	P	NA	NA	P	NA	NA	NA

2

[1] Certain variant codes cannot be used simultaneously.

S = Included as standard.
M = On modification of a stocked motor, or on new manufacture, the number per order may be limited.
P = New manufacture only.
R = On request.
NA = Not applicable.

Marine aluminum motors

Dimension drawings

Foot mounted motor IM 1001, B3

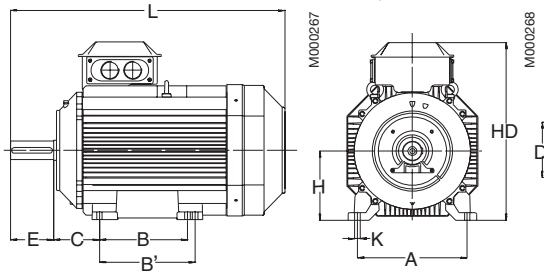

Flange mounted motor IM 3001, B5

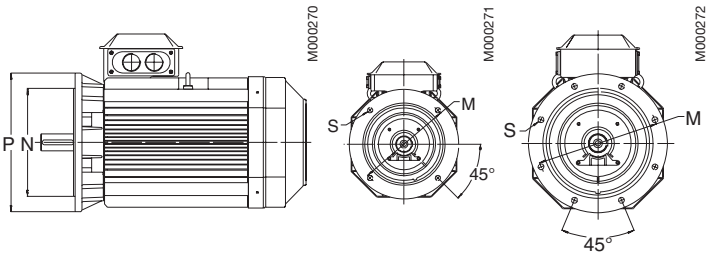

Motor size	IM 1001, B3 and IM 3001,B5										IM 1001, B3						IM 3001, B5				
	D poles		GA poles		F poles		E poles		L max poles												
	2	4-8	2	4-8	2	4-8	2	4-8	2	4-8	A	B	B'	C	HD	K	H	M	N	P	S
M2VA 56	9	9	10.2	10.2	3	3	20	20	197	197	90	71	–	36	159	5.8	56	100	80	120	7
63	11	11	12.5	12.5	4	4	23	23	214	205	100	80	–	40	171	7	63	115	95	140	10
71	14	14	16	16	5	5	30	30	238	238	112	90	–	45	176	7	71	130	110	160	10
80	19	19	21.5	21.5	6	6	40	40	265	265	125	100	–	50	190	10	80	165	130	200	12
M3AA 90 S	24	24	27	27	8	8	50	50	295	295	140	100	–	56	212	10	90	165	130	200	12
90 L	24	24	27	27	8	8	50	50	320	320	140	125	–	56	212	10	90	165	130	200	12
100	28	28	31	31	8	8	60	60	358.5	385.5	160	140	–	63	236	12	100	215	180	250	15
M2AA 112	28	28	31	31	8	8	60	60	361 [2]	361 [2]	190	140	–	70	258	12	112	215	180	250	14.5
132	38	38	41	41	10	10	80	80	447 [3]	447 [3]	216	140	178 [1]	89	295.5	12	132	265	230	300	14.5
160	42	42	45	45	12	12	110	110	602.5	602.5	254	210	254	108	370	15	160	300	250	350	19
180 M	48	48	51.5	51.5	14	14	110	110	602.5	602.5	279	241	279	121	390	15	180	300	250	350	19
180 L	48	48	51.5	51.5	14	14	110	110	643.5	643.5	279	241	279	121	390	15	180	300	250	350	19
200 LA	55	55	59	59	16	16	110	110	711.5	711.5	318	267	305	133	425	18	200	350	300	400	19
200 L 2-4	55	55	59	59	16	16	110	110	732	732	318	267	305	133	425	18	200	350	300	400	19
225 M	55	65	59	64	16	18	110	140	773	843	356	286 [1]	311	149	525.5	18	225	400	350	450	19
225 S	–	60	–	64	–	18	–	140	–	803	356	286	311 [1]	149	525.5	18	225	400	350	450	19
250 M	60	65	64	69	18	18	140	140	866	866	406	311 [1]	349	168	571	22	250	500	450	550	19
M3AA 112 M 6-8	–	28	–	31	–	8	–	60	–	361 [2]	190	140	–	70	258	12	112	215	180	250	14.5
112 M 2-4, MB	28	28	31	31	8	8	60	60	388 [2]	388 [2]	190	140	–	70	258	12	112	215	180	250	14.5
132 SA,S, MA, MB 6, M8	38	38	41	41	10	10	80	80	447 [3]	447 [3]	216	140	178 [1]	89	295.5	12	132	265	230	300	14.5
132 all exc. above	38	38	41	41	10	10	80	80	481.5[3]	481.5[2]	216	140 [1]	178	89	295.5	12	132	265	230	300	14.5
160 M/MA 2-8, L 2-6, LB 2-4	42	42	45	45	12	12	110	110	602.5	602.5	254	210	254	108	370	15	160	300	250	350	19
160 L 8, LB 6-8	42	42	45	45	12	12	110	110	643.5	643.5	254	210	254	108	370	15	160	300	250	350	19
180 M 2-4,L 6-8, LB 2	48	48	51.5	51.5	14	14	110	110	680	680	279	241	279	121	405	15	180	300	250	350	19
180 L 4, LB 4-8	48	48	51.5	51.5	14	14	110	110	700.5	700.5	279	241	279	121	405	15	180	300	250	350	19
200 MLD-2,-C 4	55	55	59	59	16	16	110	110	814	814	318	267	305	133	533	18	200	350	300	400	19
200 all exc. above	55	55	59	59	16	16	110	110	774	774	318	267	305	133	533	18	200	350	300	400	19
225 SMB, -C	55	55	59	59	16	16	110	110	836	836	356	286	311	149	578	18	225	400	350	450	19
225 SMA,-B,-C	60	60	64	64	18	18	140	140	866	866	356	286	311	149	578	18	225	400	350	450	19
225 SMD	55	60	59	64	16	18	110	140	861	891	356	286	311	149	578	18	225	400	350	450	19
250 SMA,-B	60	65	64	69	18	18	140	140	875	875	406	311	349	168	626	22	250	500	450	550	19
250 SMC	60	65	64	69	18	18	140	140	900	900	406	311	349	168	626	22	250	500	450	550	19
280 SMA	65	75	69	79.5	18	20	140	140	875	875	457	368	419	190	656	24	280	500	450	550	19
280 SMB	65	75	69	79.5	18	20	140	140	900	900	457	368	419	190	656	24	280	500	450	550	19

IM 3601, IM B14

Motor size	M	N	P	S
56	65	50	80	M5
63	75	60	90	M5
71	85	70	105	M6
80	100	80	120	M6
90	115	95	140	M8
100	130	110	160	M8
112	130	130	160	M8
132	165	165	200	M10

Tolerances:

A, B	± 0,8
D, DA	ISO k6 < Ø 50mm ISO m6 > Ø 50mm
F, FA	ISO h9
H	+0 -0.5
N	ISO j6
C, CA	± 0.8

[1] Not according to IEC.
[2] For variant code 053 increased by 7.5 mm.
[3] For variant code 053 increased by 5.5 mm.

Above table gives the main dimensions in mm.

For detailed drawings please check our web site 'www.abb.com/motors&drives' or contact ABB.

Marine aluminum motors in brief, basic design

Size		56	63	71	80	90	100
Stator and feet	Material Paint colour shade Paint	Diecast aluminum alloy. Loose feet in sizes 71-100; feet integrated with stator in sizes 56-63. Munsell blue 8B 4.5/3.25 / NCS 4822 B05G. Epoxy polyester powder paint, ≥ 30µm.				Polyester powder paint, ≥ 30 µm.	
Bearing end shields	Material Paint colour shade Paint	Diecast aluminum alloy. Munsell blue 8B 4.5/3.25 / NCS 4822 B05G. Epoxy polyester powder paint, ≥ 30µm.				Polyester powder paint, ≥ 30 µm.	
Bearings **Single-speed motor**	D-end N-end	6201-2Z/C3 6201-2Z/C3	6202-2Z/C3 6201-2Z/C3	6203-2Z/C3 6202-2Z/C3	6204-2Z/C3 6203-2Z/C3	6205-2Z/C3 6204-2Z/C3	6306-2Z/C3 6205-2Z/C3
Bearings **Two-speed motor**	D-end N-end	6201-2Z/C3 6201-2Z/C3	6202-2Z/C3 6201-2Z/C3	6203-2Z/C3 6202-2Z/C3	6204-2Z/C3 6203-2Z/C3	6205-2Z/C3 6204-2Z/C3	6306-2Z/C3 6205-2Z/C3
Axially-locked bearings	Inner bearing cover	Spring washer at the N-end.				D-end.	
Bearing seals	D-end N-end	V-ring. Labyrinth seal.					
Lubrication		Permanently lubricated bearings. Grease for bearing temperatures -40 to +160°C.					
Terminal box	Material Surface treatment Screws	Diecast aluminum alloy. Similar to stator. Steel 5G. Chromated.					
Connections	Knock-out openings Max Cu-area mm2 Terminal box	1 x M16 x Pg11 2.5 Screw terminal, 6 terminals.		2 x M20 x Pg16 4		2 x (M25 + M20) 6	
Fan	Material	Polypropylene. Reinforced with 20% glass fibre.					
Fan cover	Material	Steel.					
Stator winding	Material Impregnation Insulation class	Copper. Polyester varnish. Tropicalised. Insulation class F.					
Stator winding temperature sensors		Optional.					
Rotor winding	Material	Diecast aluminum.					
Balancing method		Half key balancing.					
Key way		Closed keyway.					
Drain holes		Standard.					
Enclosure		IP 55.					
Cooling method		IC 411.					

Size	M2AA	112	132	160	180	200	225	250
Stator	Material	Diecast aluminum alloy.					Extruded aluminum alloy.	
	Paint colour shade Paint	Munsell blue 8B 4.5/3.25 / NCS 4822 B05G. Polyester powderpaint, ≥ 50µm.						
Feet	Material	Aluminum alloy, integrated with stator.			Cast iron bolted to the stator.			
Bearing end shields	Material	Diecast aluminum alloy.			Flanged bearing end shields cast iron, others diecast aluminum. 280 N-end shields cast iron in 2-pole motors.			
	Paint colour shade Paint	Munsell blue 8B 4.5/3.25 / NCS 4822 B05G. Polyester powderpaint, ≥ 50µm.						
Bearings **Single-speed motor**	D-end N-end	6206-2Z/C3 6205-2Z/C3	6208-2Z/C3 6206-2Z/C3	6309-2Z/C3 6209-2Z/C3	6310-2Z/C3 6209-2Z/C3	6312/C3 6209-2Z/C3	6313/C3 6210/C3	6315/C3 6212/C3
Bearings **Two-speed motor**	D-end N-end	NA NA						
Axially-locked bearings	Inner bearing cover	D-end[1)]		D-end				
		[1)] Foot motor. A spring washer at the N-end presses the motor towards the D-end. Flange motor. Inner bearing cover and spring-washer at the N-end.						
Bearing seals	D-end N-end	V-ring Labyrinth seal.					Outer and inner V-rings. Outer and inner V-rings.	
Lubrication		Permanently lubricated shielded bearings. Grease temperature range -40 to +160°C.					Valve lubrication. Grease temp. range -40 to 150°C.	
Terminal box	Material Surface treatment	Diecast aluminum alloy,base integrated with stator. Similar to stator.					Deep-drawn steel sheet, bolted to stator. Phosphated. Polyester paint.	
	Screws	Steel 5G. Galvanised.						
Connections **Flange-openings**	Knock-out openings	4 x(M25 + M20)		2 x (2 x M40 + M16)			2 x FL13, 2 x M40 2 x FL 21, 2 x M63 (voltage code S)	
	Screws Max Cu-area mm^2	M5 10		M6 35			M10 70	
Terminal box		Cable lugs, 6 terminals.						
Fan	Material	Polypropylene. Reinforced with 20% glass fibre.						
Fan cover	Material Surface treatment	Polypropylene.		Steel sheet. Also two-speed sizes 112 and 132 M. Phosphated. Polyester paint.				
Stator winding	Material Impregnation Insulation class	Copper. Polyester varnish. Tropicalised. Insulation class F.						
Stator winding temperature sensors		Optional.					PTC thermistors, 150°C, 3 in series.	
Rotor winding	Material	Diecast aluminum.						
Balancing method		Half key balancing.						
Key way		Closed keyway.						
Drain holes		Drain holes with closable plastic plugs, open on delivery.						
Enclosure		IP 55.						
Cooling method		IC 411.						

2

Size	M3AA	112	132	160	180	200	225	250	280
Stator	Material	Diecast aluminum alloy.				Extruded aluminum alloy.			
	Paint colour shade Paint	Munsell blue 8B 4.5/3.25 / NCS 4822 B05G. Polyester powderpaint, ≥ 50µm.							
Feet	Material	Aluminum alloy, integrated with stator.				Aluminum[1]) alloy, bolted to the stator. [1]) 250-2, cast iron.			Cast iron.
Bearing end shields	Material	Diecast aluminum alloy.			Flanged bearing end shields cast iron, others diecast aluminum.				Cast iron.
	Paint colour shade Paint	Munsell blue 8B 4.5/3.25 / NCS 4822 B05G. Polyester powderpaint, ≥ 50µm.							
Bearings **Single-speed motor**	D-end N-end [2]) N-end [3])	6206-2Z/C3 6205-2Z/C3 6206-2Z/C3	6208-2Z/C3 6206-2Z/C3 6208-2Z/C3	6309-2Z/C3 6209-2Z/C3	6310-2Z/C3 6209-2Z/C3	6312/C3 6210/C3	6313/C3 6212/C3	6315/C3 6213/C3	6316/C3[1]) 6213/C3
		[1]) 6315/C3 for 2-pole motors. [2]) M3AA 112: M-6, M-8, M3AA 132: SA-2, S-4, S-6, MA-6, MB-6, S-8 and M-8. [3]) All motors sizes 112-132 not included in [2]).							
Bearings **Two-speed motor**	D-end N-end [1]) N-end [2])	6206-2Z/C3 6206-2Z/C3 6205-2Z/C3	6208-2Z/C3 6206-2Z/C3 6206-2Z/C3	6309-2Z/C3 6209-2Z/C3	6310-2Z/C3 6209-2Z/C3	6312/C3 6210/C3	6313/C3 6212/C3	6315/C3 6213/C3	NA
		[1]) M3AA 112, M3AA 132M			[2]) M3AA 132S				
Axially-locked bearings	Inner bearing cover	D-end[1])		D-end					
		[1]) Foot motor. A spring washer at the N-end presses the motor towards the D-end. Flange motor. Inner bearing cover and spring-washer at the N-end.							
Bearing seals	D-end N-end	V-ring. Labyrinth seal. Except two-speed motors 112-132M, outer and inner V-rings.				Outer and inner V-rings. Outer and inner V-rings.			
Lubrication		Permanently lubricated shielded bearings. Grease temperature range -40 to +160°C.				Valve lubrication. Grease temp. range -40 to 150°C.			
Terminal box	Material Surface treatment Screws	Diecast aluminum alloy,base integrated with stator. Similar to stator. Steel 5G. Galvanised.				Deep-drawn steel sheet, bolted to stator. Phosphated. Polyester paint.			
Connections	Knock-out openings Flange-openings	4 x(M25 + M20)		2 x (2 x M40 + M16)		2 x FL13, 2 x M40 2 x FL 21, 2 x M63 (voltage code S)			2 x FL21 2 x M63 1 x M16
Terminal box	Screws Max Cu-area mm²	M5 10 Cable lugs, 6 terminals.		M6 35		M10 70			
Fan	Material	Polypropylene. Reinforced with 20% glass fibre.							
Fan cover	Material Surface treatment	Polypropylene.		Steel sheet. Also two-speed sizes 112 and 132 M. Phosphated. Polyester paint.					
Stator winding	Material Impregnation Insulation class	Copper. Polyester varnish. Tropicalised. Insulation class F.							
Stator winding temperature sensors		Optional.				PTC thermistors, 150°C, 3 in series.			
Rotor winding	Material	Diecast aluminum.							
Balancing method		Half key balancing.							
Key way		Closed keyway.							
Enclosure		IP 55.							
Cooling method		IC 411.							

Marine Steel Motors

Totally enclosed squirrel cage three phase low voltage motors, Sizes 280 - 400, 75 to 630 kW

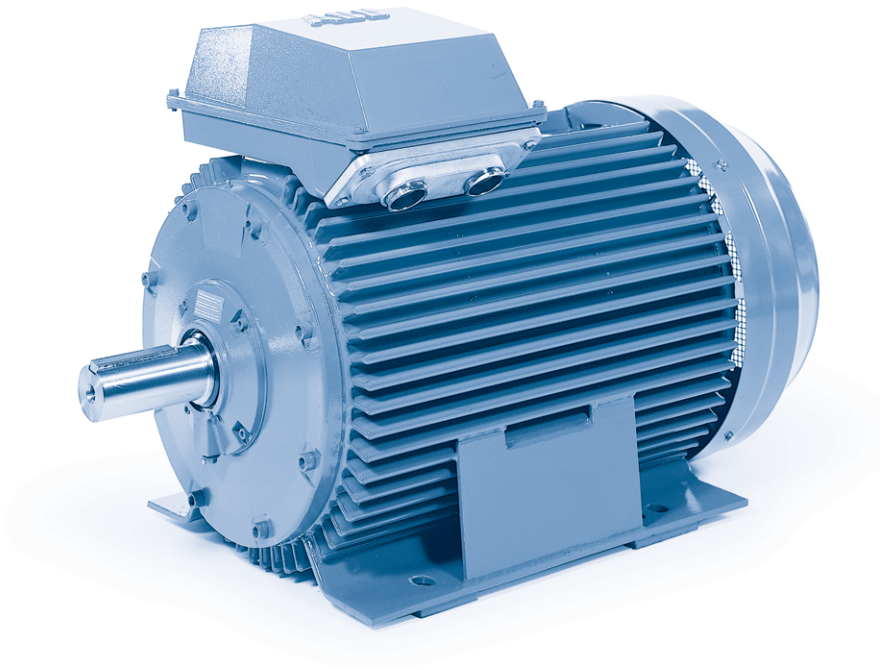

3

www.abb.com/motors&drives

> Motors
>> LV Motors >>> Marine Motors

Mechanical design..... 54

Rating plate..... 60

Ordering information..... 61

Technical data..... 62

Variant codes..... 68

Dimension drawings..... 72

Steel motors in brief..... 73

Mechanical design

Stator

The stator frame is made of profile-pressed sheet steel, giving the motor high mechanical strength, low weight and a good surface finish. The stator core is welded into the stator frame and contributes to its excellent mechanical properties.

Feet and lifting eyes are welded to the stator frame. The terminal box and end shields are of cast iron.

Drain holes

Motors that will be operated in very humid or wet environments, and especially under intermittent duty, should be provided with drain holes. The appropriate IM designation, such as IM V3 (IM 3031), is specified, on the basis of the method of motor mounting.

M2CA motors are fitted with drain holes and plugs. The plugs are open on delivery. Check that the drain holes and grease outlet face downwards, when mounting designation differs from standard horizontal mounting.

In the case of vertical mounting, the upper plug must be hammered home completely. In very dusty environments the drain hole plug should be knocked in.

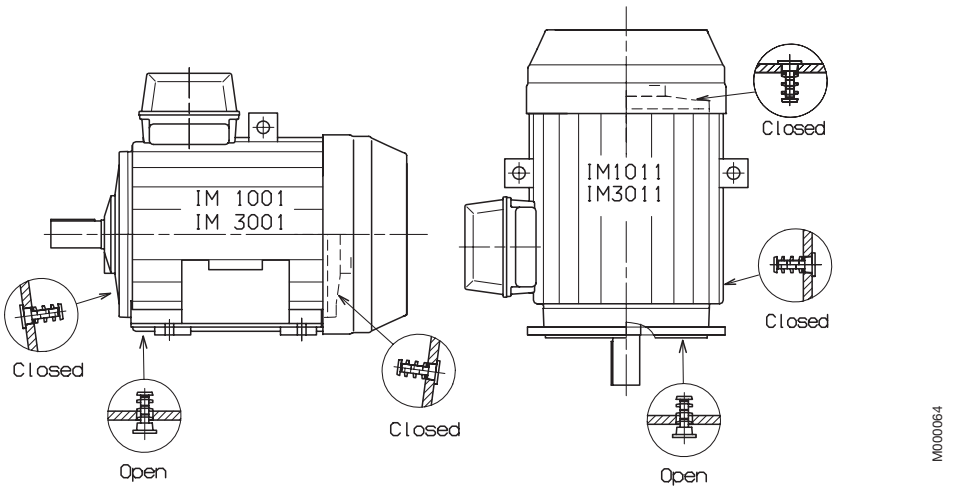

Terminal box

Terminal boxes are mounted either on the top of the motor, or on either side of the motor, see ordering information.

In basic version the terminal box can be rotated 2x180° to allow cable entry from either side of the motor, as option the terminal box can be turned 4x90°.

Degree of protection of standard terminal box is IP 55.

The terminal box is equipped with cable glands or cable boxes as standard, and terminations are suitable for Cu- and Al-cables. Cables are connected to the terminals by cable lugs which are not included with the motor.

To enable us to supply suitable terminations for the motor please state cable type, quantity and size when ordering. Non-standard design of terminal boxes; e.g. size, degree of protection, are available as options.

Please see variant codes for options and dimension drawings of terminal boxes.

Motor sizes 280 to 400 - Co-ordination of terminal boxes and cable entries

Voltage 220 - 690 V, 50 Hz

Motor size	Voltage/ freq. code	Top-mounted Terminal box	Top-mounted Flange or adapter	Side-mounted Terminal box	Side-mounted Flange or adapter	Cable box or cable gland	**Gland thread**	Cable diameter	Max. conn. cable area mm²
3000 r/min (2 poles)									
280		122/4	3GZF 294730-749	122/5	3GZF 294730-749	2x 3GZF 294730-613	**2x M63x1.5**	2x Ø32-49	2x150
315 S_,M_,LA,LB		142/4	3GZF 294730-753	142/6	3GZF 294730-753	2x 3GZF 294730-613	**2x M63x1.5**	2x Ø32-49	2x240
315		162/4	3GZF 294730-944	162/7	3GZF 294730-759	3GZF 294730-301		2x Ø48-60	4x240
355 SA		370	3GZF 294730-753	370	3GZF 294730-753	2x 3GZF 294730-613	**2x M63x1.5**	2x Ø32-49	2x240
355 M_	D	750	3GZF 294730-944	750	3GZF 294730-759	3GZF 294730-301		2x Ø48-60	4x240
	E	370	3GZF 294730-753	370	3GZF 294730-753	2x 3GZF 294730-613	**2x M63x1.5**	2x Ø32-49	2x240
355 L_		750	3GZF 294730-944	750	3GZF 294730-759	3GZF 294730-301		2x Ø48-60	4x240
400 ML_		750	3GZF 294730-944	750	3GZF 294730-759	3GZF 294730-501		2x Ø60-80	4x240
400 LK_		750	3GZF 294730-944	750	3GZF 294730-759	3GZF 294730-501		2x Ø60-80	4x240
1500 r/min (4 poles)									
280		122/4	3GZF 294730-749	122/5	3GZF 294730-749	2x 3GZF 294730-613	**2x M63x1.5**	2x Ø32-49	2x150
315 S_,M_,LA, LB		142/4	3GZF 294730-753	142/6	3GZF 294730-753	2x 3GZF 294730-613	**2x M63x1.5**	2x Ø32-49	2x240
315		162/4	3GZF 294730-944	162/7	3GZF 294730-759	3GZF 294730-301		2x Ø48-60	4x240
355 SA		370	3GZF 294730-753	370	3GZF 294730-753	2x 3GZF 294730-613	**2x M63x1.5**	2x Ø32-49	2x240
355 M_	D	750	3GZF 294730-944	750	3GZF 294730-759	3GZF 294730-301		2x Ø48-60	4x240
	E	370	3GZF 294730-753	370	3GZF 294730-753	2x 3GZF 294730-613	**2x M63x1.5**	2x Ø32-49	2x240
355 LA, LB		750	3GZF 294730-944	750	3GZF 294730-759	3GZF 294730-301		2x Ø48-60	4x240
355 LKD		750	3GZF 294730-944	750	3GZF 294730-759	3GZF 294730-501		2x Ø60-80	4x240
400 ML_		750	3GZF 294730-944	750	3GZF 294730-759	3GZF 294730-501		2x Ø60-80	4x240
400 LKA	D	750	3GZF 294730-944	750	3GZF 294730-759	3GZF 294730-501		2x Ø60-80	4x240
400 LKB		750	3GZF 294730-944	750	3GZF 294730-759	3GZF 294730-501		2x Ø60-80	4x240
1000 r/min (6 poles)									
280		122/4	3GZF 294730-749	122/6	3GZF 294730-749	2x 3GZF 294730-613	**2x M63x1.5**	2x Ø32-49	2x150
315 S_,M_,LA		142/4	3GZF 294730-753	142/6	3GZF 294730-753	2x 3GZF 294730-613	**2x M63x1.5**	2x Ø32-49	2x240
355 SA,SB		370	3GZF 294730-753	370	3GZF 294730-753	2x 3GZF 294730-613	**2x M63x1.5**	2x Ø32-49	2x240
355 MA		370	3GZF 294730-753	370	3GZF 294730-753	2x 3GZF 294730-613	**2x M63x1.5**	2x Ø32-49	2x240
355 MB	D	750	3GZF 294730-944	750	3GZF 294730-759	3GZF 294730-301		2x Ø48-60	4x240
	E	370	3GZF 294730-753	370	3GZF 294730-753	2x 3GZF 294730-613	**2x M63x1.5**	2x Ø32-49	2x240
355 LKD		750	3GZF 294730-944	750	3GZF 294730-759	3GZF 294730-301		2x Ø48-60	4x240
400 MLA		750	3GZF 294730-944	750	3GZF 294730-759	3GZF 294730-301		2x Ø48-60	4x240
400 MLB		750	3GZF 294730-944	750	3GZF 294730-759	3GZF 294730-501		2x Ø60-80	4x240
400 LK_		750	3GZF 294730-944	750	3GZF 294730-759	3GZF 294730-501		2x Ø60-80	4x240
750 r/min (8 poles)									
280		122/4	3GZF 294730-749	122/5	3GZF 294730-749	2x 3GZF 294730-613	**2x M63x1.5**	2x Ø32-49	2x150
315		142/4	3GZF 294730-753	142/6	3GZF 294730-753	2x 3GZF 294730-613	**2x M63x1.5**	2x Ø32-49	2x240
355 SA, SB		370	3GZF 294730-753	370	3GZF 294730-753	2x 3GZF 294730-613	**2x M63x1.5**	2x Ø32-49	2x240
355 MA		370	3GZF 294730-753	370	3GZF 294730-753	2x 3GZF 294730-613	**2x M63x1.5**	2x Ø32-49	2x240
355 MB		370	3GZF 294730-753	370	3GZF 294730-753	2x 3GZF 294730-613	**2x M63x1.5**	2x Ø32-49	2x240

Voltage/frequency codes:
D = 380-420 VD 50 Hz, 660/690 VY 50 Hz, 440-480 VD 60 Hz
E = 500 VD 50 Hz, 575 VD 60 Hz

Earthing bolt size on terminal box 2xM10.
Terminal bolt size M12.

Motor sizes M2CA 280 to 315, top-mounted

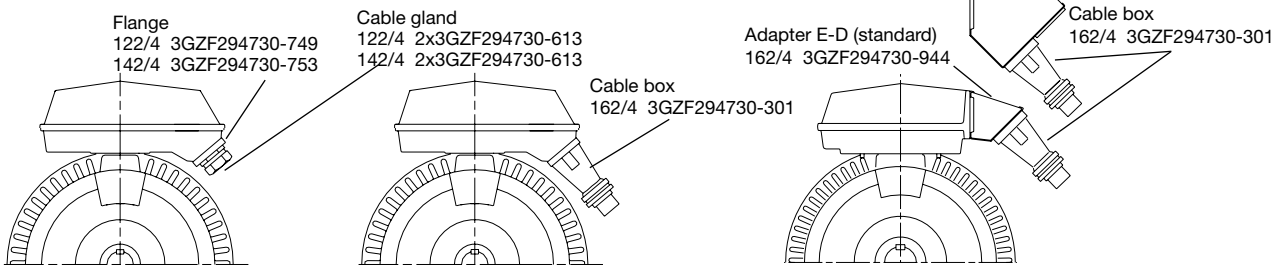

Motor sizes M2CA 280 to 315, side-mounted

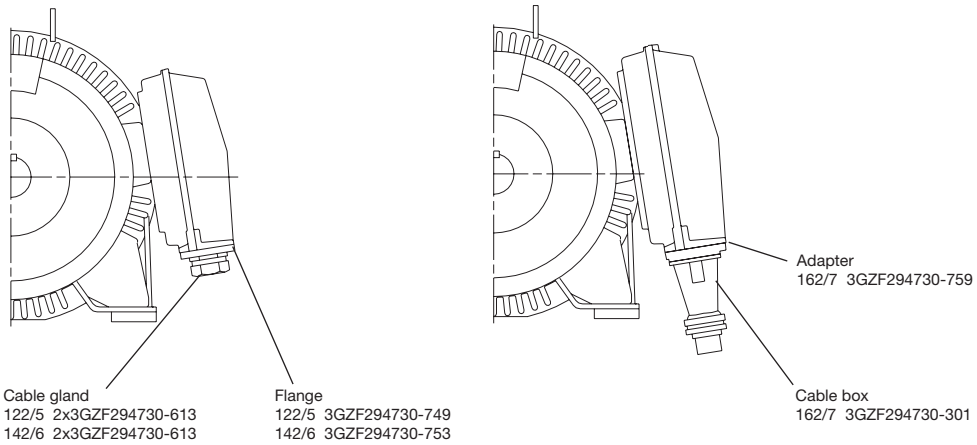

3

Motor sizes M2CA 355 to 400, top-mounted

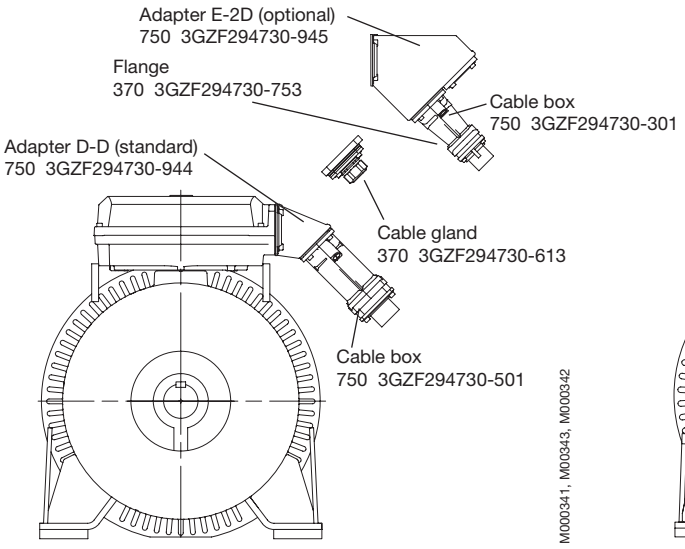

Motor sizes M2CA 355 to 400, side-mounted

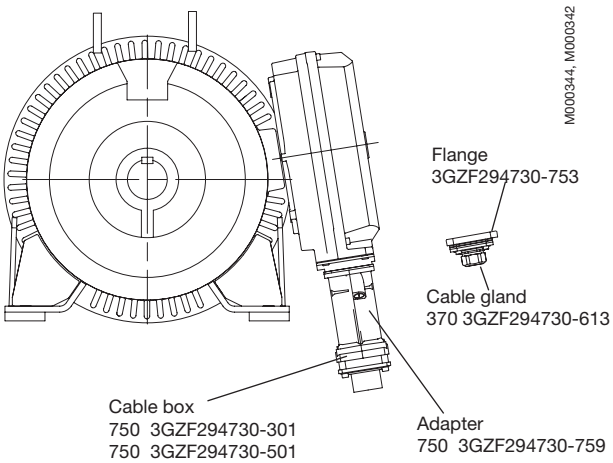

Auxiliary devices (view from N-end)

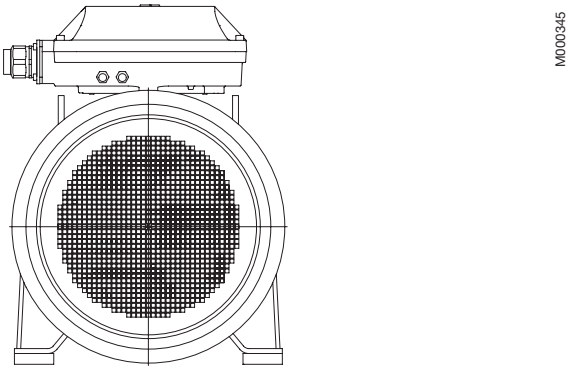

Dimension for terminal box inlet

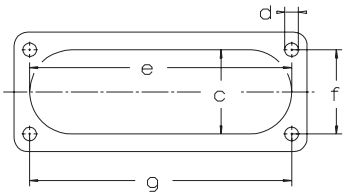

Inlet	c	e	f	g	d
C	62	193	62	193	M8
D	100	300	80	292	M10
E	115	370	100	360	M12

Bearings

The motors are normally fitted with single-row deep groove ball bearings as listed in the table below. The complete ball bearing designation is stated on the rating plate.

If the bearing at the D-end is replaced with a roller bearing (NU- or NJ-), higher radial forces can be handled. Roller bearings are suitable for belt drive applications.

When there are high axial forces, angular contact ball bearings should be used. This option is available on request. When a motor with angular contact ball bearings is ordered, the method of mounting and direction and magnitude of the axial force must be specified. For special bearings, please see the variant codes.

Motor size	Number of poles	**Standard design Deep groove ball bearings** D-end	**Alternative designs** N-end	**Roller bearings variant code 037** D-end
280	2 4-12	6316/C4 6316/C3	6316/C4 6316/C3	[1)] NU 316/C3
315	2 4-12	6316/C4 6319/C3	6316/C4 6316/C3	[1)] NU319/C3
355	2 4-12	6316M/C4 6322/C3	6316M/C4 6319/C3	[1)] NU 322/C3
400	2 4-123	6317M/C4 6322/C3	6317M/C4 6319/C3	[1)] NU 322/C3

3

Axially-locked bearings

The outer bearing ring at the D-end is axially locked with an inner bearing cover. The inner ring is locked by tight tolerance to the shaft.

All motors are equipped as standard with an axially-locked bearing at the D-end.

Transport locking

Motors that have roller bearings or an angular contact ball bearing are fitted with a transport lock before despatch to prevent damage to the bearings during transport. In case of transport locked bearing, the motor is provided with a warning sign.

Locking may also be fitted in other cases where transport conditions are suspected of being potentially damaging.

Bearing seals

M2CA motors have, as standard, V-rings at both ends. The size and type of suitable seals are in accordance with the table below:

Motor size	Number of poles	d_1	d_2	B_1	b	Standard design Axial seal D-end	N-end	Alternative design Radial seal (DIN 3760) Variant code 072
280	2	80	100	13.5	10	VS 80	VS 80	80x100x10[1)]
	4-12	80	100	13.5	10	VS 80	VS 80	80x100x10
315	2	80	100	13.5	10	VS 80	VS 80	80x100x10[1)]
	4-12	95	120	13.5	12	VS 95	VS 80	95x120x12
355	2	95	120	13.5	12	VS 80	VS 80	80x100x10[1)]
	4-12	110	140	15.5	12	VS 110	VS 95	110x140x12[1)]
400	2					[2)]	[2)]	
	4-12	110	140	15.5	12	VS 110	VS 95	110x140x12[1)]

[1)] Viton-seal
[2)] Labyrinth seal

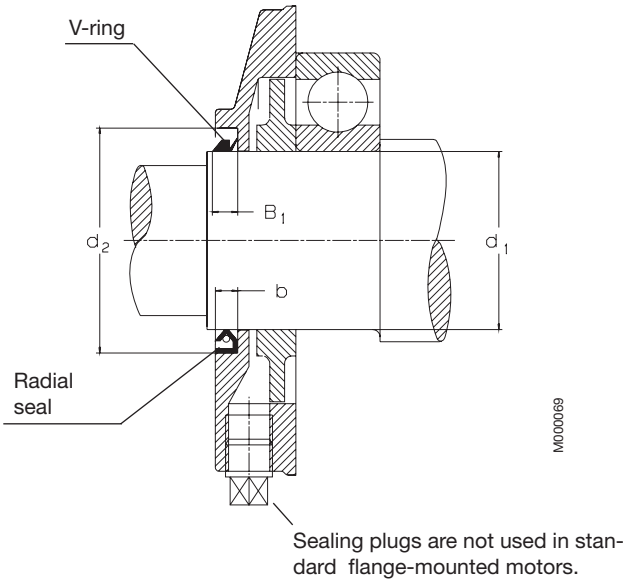

Bearing life

The nominal life L_{10} of a bearing is defined according to ISO as the number of operating hours achieved or exceeded by 90 % of identical bearings in a large test series under certain specified conditions. 50% of the bearings achieve at least five times this figure.

The calculated bearing life L_{10} for power transmission by means of a coupling (horizontal machine): Motor sizes M2CA 280 to 400 ≥ 200,000 hours.

Pulley diameter

When the desired bearing life has been determined, the minimum permissible pulley diameter can be calculated using F_R, as follows:

$$D = \frac{1.9 \cdot 10^7 \cdot K \cdot P}{n \cdot F_R}$$

where:
D = diameter of pulley, mm
P = power requirement, kW
n = motor speed, r/min
K = belt tension factor, dependent on belt type and type of duty. A common value for V-belts is 2.5.
F_R = permissible radial force

Permissible loading on shaft

The table below gives the permissible radial and axial forces in Newtons, assuming the occurrence of only radial or axial force. In case of simultaneous radial and axial forces, information can be supplied on request. The values are based on normal conditions at 50 Hz and calculated bearing lives of 40,000 h.

Motors are B3 version with force directed sideways. In some cases the strength of the shaft affects the permissible forces.

At 60 Hz the values must be reduced by 10 %. For two-speed motors, the values must be based on the higher speed. When there are high axial forces, angular contact ball bearings should be used.

Permissible loads of simultaneous radial and axial forces will be supplied on request.

Permissible radial and axial force for a bearing life of 40,000 hours

			Permissible radial force:				**Permissible axial force:**		
			Horizontal mounting, sideways direction of force				Horizontal	Vertical mounting with shaft extension downwards	
			Ball bearing at point of application:		Roller bearing at point of application:		Direction of force		
Motor size	Number of poles	Length of shaft extension E (mm)	FX_0 (N)	FX_{max} (N)	FX_0 (N)	FX_{max} (N)	Outwards N	Upwards N	Downwards N
280	2	140	5800	4800	–	–	3700	7050	2600
	4	140	7300	6100	20000	10500	4000	7650	2800
	6	140	8300	6800	22500	10500	4900	8800	3400
	8	140	9200	7500	24700	10500	5700	9750	4100
315	2	140	5800	4900	–	–	3600	7400	1800
	4	170	8900	7300	26500	10500	4900	9200	2800
	6	170	10300	8500	29800	10500	6150	10700	3300
	8	170	11300	9300	32500	11000	6900	11800	4300
355	2	140	5800	5100	–	–	2400	1)	1)
	4	210	12000	9800	36700	17500	3900	1)	1)
	6	210	13500	11300	41500	17000	5100	1)	1)
	8	210	15000	12500	45200	17500	6350	1)	1)
400	2	170	5800	5100	–	–	6700	1)	1)
	4	210	11800	10200	37300	16700	3450	1)	1)
	6	210	13600	11700	42000	13500	4750	1)	1)
	8	210	15100	12900	45700	16800	5700	1)	1)

1) On request.

If the radial force is applied between points X_0 and X_{max}, the permissible force F_R can be calculated from the following formula:

$$F_R = F_{X0} - \frac{X}{E}(F_{X0} - F_{Xmax})$$

E = length of shaft extension in basic version

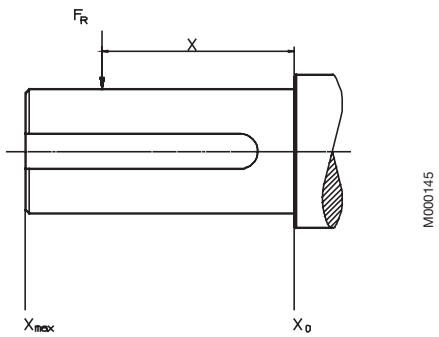

Rating plate

The rating plate is in table form giving values for speed, current and power factor for six voltages.

ABB Oy,
Motors, Vaasa, Finland

CE

3 ~ Motor M2CA 315 SMA 4 B3

IEC 315 S/M 80

No. 0320-010119452

Ins.cl. F IP 55

V	Hz	kW	r/min	A	cos φ	Duty
690 Y	50	132	1486	138	0,85	S1
400 D	50	132	1486	232	0,85	S1
660 Y	50	132	1485	141	0,86	S1
380 D	50	132	1485	245	0,86	S1
415 D	50	132	1487	232	0,84	S1
440 D	60	150	1784	238	0,87	S1

Prod.code 3GCA312310-ADA

Nmax r/min

6319/C3 6316/C3 730 kg

ABB IEC 60034-1

M000081

3

Ordering information

When placing an order, please state the following minimum data in the order, as in the example on the right.

The product code of the motor is composed in accordance with the following example.

Motor type	M2CA 315SMA
Pole number	4
Mounting arrangement (IM-code)	IM B3 (IM 1001)
Rated output	132 kW
Product code	3GCA312210-ADA
Variant codes if needed	

A	B	C	D,E,F,	G
M2CA	**315 SMA**	**3GCA 312 210 -**	**ADA,**	**003 etc.**

1 - 4	5 - 6	7	8 - 10	11	12	13	14

A Motor type
B Motor size
C Product code
D Mounting arrangement code
E Voltage/frequency code
F Generation code
G Variant code

Explanation of the product code:

Positions 1 to 4
3GCA = Totally enclosed fan cooled squirrel cage motor with steel stator frame

Positions 5 and 6
IEC-size

28	= 280	**35**	= 355
31	= 315	**40**	= 400

Position 7
Speed (Pole pairs)

1	= 2 poles	**6**	=12 poles
2	= 4 poles	**7**	= > 12 poles
3	= 6 poles	**8**	=Two-speed motors
4	= 8 poles	**9**	=Multi-speed motors
5	= 10 poles		

Position 8 to 10
Serial number

Position 11
- (dash)

Position 12
Mounting arrangement
A = Foot-mounted, top-mounted terminal box
R = Foot-mounted, terminal box RHS seen from D-end
L = Foot-mounted, terminal box LHS seen from D-end
B = Flange-mounted, large flange
H = Foot- and flange-mounted, top-mounted terminal box
S = Foot- and flange-mounted, terminal box RHS seen from D-end
T = Foot- and flange-mounted, terminal box LHS seen from D-end

Position 13
Voltage and frequency code
See table below

Position 14
Generation code = A or C

The product code must be, if needed, followed by variant codes.

Code letters for supplementing the product code for voltage and frequency:

A	B	D	E	F	H
380 VY 50 Hz	380 VΔ 50 Hz	380-420 VΔ 50 Hz 660-690 VY 50 Hz 440-480 VΔ 60 Hz	500 VΔ 50 Hz 575 VΔ60 Hz	500 VY 50 Hz 575 VY 60 Hz	415 VΔ 50 Hz

S	T	U	X
220-240 VΔ 50 Hz 380-420 VY 50 Hz 440-480 VY 60 Hz	660 VΔ 50 Hz	690 VΔ 50 Hz	Other rated voltage, connection or frequency max. 690 V

Marine steel motors

Technical data, Non-Essential/Essential Services

IP 55 - IC 411 - temperature rise 90 K

Output kW	Motor type		Product code		Speed r/min	Effi-ciency %	Power factor cos φ	Current I_N A	Current I_s / I_N	Torque T_N Nm	Torque T_s / T_N	Torque T_{max} / T_N
3000 r/min = 2 poles					**380 V 50 Hz**				**Basic design**			
75	**M2CA**	**280 SA**	3GCA	281 110-••A	2974	94.8	0.89	137	6.8	241	2.1	2.9
90	**M2CA**	**280 SMA**	3GCA	281 210-••A	2970	95.1	0.90	159	6.7	289	2.1	2.6
110	**M2CA**	**315 SA**	3GCA	311 110-••A	2980	95.1	0.87	202	6.9	353	1.8	2.7
132	**M2CA**	**315 SMA**	3GCA	311 210-••A	2980	95.4	0.89	238	6.7	423	2.0	2.7
160	**M2CA**	**315 MB**	3GCA	311 320-••A	2979	96.1	0.90	282	6.8	513	2.1	2.7
200	**M2CA**	**315 LA**	3GCA	311 510-••A	2977	96.3	0.90	350	7.0	642	2.4	2.7
200	**M2CA**	**355 SA**	3GCA	351 110-••C	2975	95.4	0.90	353	5.7	642	1.1	2.3
250	**M2CA**	**355 MA**	3GCA	351 310-••C	2981	95.9	0.90	439	6.6	801	1.2	2.8
280	**M2CA**	**355 MB**	3GCA	351 320-••C	2978	96.0	0.90	492	6.2	898	1.2	2.5
315	**M2CA**	**355 LA**	3GCA	351 510-••C	2978	96.3	0.89	560	6.3	1010	1.9	2.7
355	**M2CA**	**355 LB**	3GCA	351 520-••C	2981	96.5	0.89	627	7.0	1137	1.9	2.6
400	**M2CA**	**400 MLA**	3GCA	401 410-••C	2983	96.7	0.89	705	6.5	1280	1.2	2.4
450	**M2CA**	**400 MLB**	3GCA	401 420-••C	2986	96.9	0.90	782	7.2	1439	1.5	2.7
500	**M2CA**	**400 LKA**	3GCA	401 810-••C	2986	97.0	0.91	858	7.4	1599	1.8	2.9
560	**M2CA**	**400 LKB**	3GCA	401 820-••C	2986	97.2	0.90	980	7.1	1791	1.9	3.0
3000 r/min = 2 poles					**380 V 50 Hz**				**High-output design**			
110	**M2CA**	**280 MB**	3GCA	281 320-••A	2974	95.7	0.91	193	7.2	353	2.2	2.7
132	**M2CA**	**280 MC**	3GCA	281 330-••A	2972	95.9	0.91	233	7.0	424	2.3	2.7
160	**M2CA**	**280 MD**	3GCA	281 340-••A	2971	96.1	0.91	280	7.1	514	2.5	2.8
250	**M2CA**	**315 LB**	3GCA	311 520-••A	2977	96.3	0.89	444	7.3	802	2.5	2.6
315	**M2CA**	**315 LC**	3GCA	311 530-••A	2979	96.8	0.90	552	7.9	1010	2.8	2.9
1500 r/min = 4 poles					**380 V 50 Hz**				**Basic design**			
75	**M2CA**	**280 SA**	3GCA	282 110-••A	1481	94.8	0.86	142	6.2	483	2.2	2.5
90	**M2CA**	**280 SMA**	3GCA	282 210-••A	1482	95.1	0.86	169	6.5	579	2.4	2.6
110	**M2CA**	**315 SA**	3GCA	312 110-••A	1486	95.3	0.86	204	6.4	707	1.9	2.5
132	**M2CA**	**315 SMA**	3GCA	312 210-••A	1485	95.5	0.86	245	6.1	849	2.0	2.4
160	**M2CA**	**315 MB**	3GCA	312 320-••A	1485	95.9	0.87	294	6.6	1029	2.1	2.6
200	**M2CA**	**315 LA**	3GCA	312 510-••A	1484	96.1	0.87	365	6.6	1286	2.2	2.6
200	**M2CA**	**355 SA**	3GCA	352 110-••C	1487	95.9	0.87	364	6.6	1284	1.8	2.3
250	**M2CA**	**355 MA**	3GCA	352 310-••C	1487	96.1	0.87	453	6.8	1605	1.9	2.3
315	**M2CA**	**355 LA**	3GCA	352 510-••C	1487	96.3	0.87	571	6.6	2023	2.0	2.5
355	**M2CA**	**355 LB**	3GCA	352 520-••C	1488	96.5	0.87	640	6.8	2277	2.1	2.4
400	**M2CA**	**355 LKD**	3GCA	352 840-••C	1488	96.5	0.88	712	7.2	2567	2.2	2.5
450	**M2CA**	**400 MLA**	3GCA	402 410-••C	1490	96.5	0.88	804	6.7	2884	1.7	2.4
500	**M2CA**	**400 MLB**	3GCA	402 420-••C	1491	96.7	0.87	900	7.3	3202	1.9	2.6
560	**M2CA**	**400 LKA**	3GCA	402 810-••C	1490	96.8	0.86	1022	6.7	3589	2.1	2.7
630	**M2CA**	**400 LKB**	3GCA	402 820-••C	1490	96.8	0.88	1122	6.9	4037	1.9	2.7
1500 r/min = 4 poles					**380 V 50 Hz**				**High-output design**			
110	**M2CA**	**280 MB**	3GCA	282 320-••A	1481	95.2	0.87	204	6.8	708	2.4	2.5
132	**M2CA**	**280 MC**	3GCA	282 330-••A	1481	95.4	0.87	245	6.4	851	2.5	2.6
160	**M2CA**	**280 MD**	3GCA	282 340-••A	1482	95.6	0.87	295	6.5	1030	2.5	2.8
250	**M2CA**	**315 LB**	3GCA	312 520-••A	1485	96.1	0.87	457	6.7	1608	2.2	2.6
315	**M2CA**	**315 LC**	3GCA	312 530-••A	1486	96.4	0.87	570	7.0	2024	2.3	2.8

[1] On request

The bullets in the product code indicate choice of mounting arrangement, voltage and frequency, generation code (see ordering information page).

Marine steel motors

Technical data, Non-Essential/Essential Services

IP 55 - IC 411 - temperature rise 90 K

Output kW	Motor type		Speed r/min	Effi-ciency %	Power factor cos φ	Current I_N A	Current I_s/I_N	Torque T_N Nm	Torque T_s/T_N	Torque T_{max}/T_N	Moment of inertia J=1/4 GD² kgm²	Weight kg
3600 r/min = 2 poles			**440 V 60 Hz**					**Basic design**				
90	**M2CA**	**280 SA**	3570	93.7	0.89	139	6.7	241	1.8	2.8	0.8	480
105	**M2CA**	**280 SMA**	3568	94.6	0.90	163	6.6	281	1.8	2.7	0.9	545
125	**M2CA**	**315 SA**	3580	94.5	0.88	198	7.3	333	1.8	2.6	1.2	695
155	**M2CA**	**315 SMA**	3578	95.1	0.89	238	6.7	400	1.8	2.6	1.4	770
185	**M2CA**	**315 MB**	3578	95.5	0.90	282	7.1	494	1.9	2.6	1.7	840
230	**M2CA**	**315 LA**	3576	96.0	0.91	350	7.2	614	2.1	2.6	2.1	975
230	**M2CA**	**355 SA**	3575	95.0	0.90	352	5.7	614	1.0	2.2	2.5	1200
285	**M2CA**	**355 MA**	3581	95.6	0.90	432	6.6	760	1.1	2.7	2.7	1260
315	**M2CA**	**355 MB**	3578	95.7	0.90	478	6.2	841	1.1	2.5	2.7	1260
362	**M2CA**	**355 LA**	3576	96.1	0.89	560	6.3	967	1.8	2.7	3.4	1480
400	**M2CA**	**355 LB**	3581	96.3	0.89	612	7.1	1067	1.8	2.6	3.5	1520
450	**M2CA**	**400 MLA**	3584	96.4	0.89	687	6.5	1199	1.1	2.3	6.3	2050
500	**M2CA**	**400 MLB**	3586	96.6	0.90	752	7.4	1331	1.4	2.7	6.9	2150
550	**M2CA**	**400 LKA**	3586	96.8	0.91	818	7.6	1465	1.7	2.9	7.8	2450
610	**M2CA**	**400 LKB**	3586	96.9	0.90	905	7.8	1624	1.8	3.2	7.9	2500
3600 r/min = 2 poles			**440 V 60 Hz**					**High-output design**				
125	**M2CA**	**280 MB**	3572	95.2	0.91	190	7.3	334	2.1	2.7	1.15	580
150	**M2CA**	**280 MC**	3572	95.5	0.91	230	7.1	401	2.2	2.7	1.4	755
184	**M2CA**	**280 MD**	3570	96.0	0.91	277	7.1	481	2.2	2.7	1.55	810
288	**M2CA**	**315 LB**	3576	96.1	0.89	442	7.5	769	2.4	2.6	2.65	1230
350	**M2CA**	**315 LC**	3579	96.6	0.90	528	8.3	934	2.7	2.9	3.3	1410
1800 r/min = 4 poles			**440 V 60 Hz**					**Basic design**				
88	**M2CA**	**280 SA**	1780	95.0	0.86	144	6.2	472	2.0	2.4	1.15	445
105	**M2CA**	**280 SMA**	1780	95.3	0.87	167	6.7	563	2.3	2.6	1.4	490
125	**M2CA**	**315 SA**	1785	95.1	0.87	200	6.5	668	1.8	2.5	2	675
150	**M2CA**	**315 SMA**	1784	95.6	0.87	238	6.4	803	1.9	2.4	2.3	730
185	**M2CA**	**315 MB**	1785	95.8	0.87	290	6.8	990	2.0	2.6	2.9	850
230	**M2CA**	**315 LA**	1784	96.1	0.87	362	6.8	1230	2.2	2.6	3.5	970
230	**M2CA**	**355 SA**	1788	95.8	0.87	362	6.6	1228	1.7	2.3	4.8	1200
285	**M2CA**	**355 MA**	1787	96.1	0.87	445	6.9	1523	1.8	2.3	5.7	1320
362	**M2CA**	**355 LA**	1786	96.3	0.87	570	6.7	1936	1.9	2.5	6.9	1550
400	**M2CA**	**355 LB**	1788	96.5	0.88	618	7.0	2136	2.0	2.4	6.9	1550
450	**M2CA**	**355 LKD**	1788	96.4	0.88	692	7.4	2403	2.2	2.5	8.4	1900
500	**M2CA**	**400 MLA**	1790	96.3	0.88	773	6.9	2667	1.6	2.4	12	2300
550	**M2CA**	**400 MLB**	1791	96.5	0.87	855	7.6	2933	1.8	2.6	13	2400
630	**M2CA**	**400 LKA**	1790	96.7	0.86	992	7.0	3361	2.1	2.7	15	2700
710	**M2CA**	**400 LKB**	1790	96.7	0.88	1090	7.2	3787	1.8	2.6	16	2800
1800 r/min = 4 poles			**440 V 60 Hz**					**High-output design**				
125	**M2CA**	**280 MB**	1780	95.4	0.87	200	7.0	671	2.3	2.6	1.7	550
150	**M2CA**	**280 MC**	1780	95.6	0.87	236	6.9	805	2.6	2.7	2.3	775
185	**M2CA**	**280 MD**	1781	95.8	0.87	294	6.6	992	2.4	2.8	2.5	820
288	**M2CA**	**315 LB**	1784	96.1	0.87	455	7.0	1542	2.2	2.6	4.4	1200
362	**M2CA**	**315 LC**	1786	96.4	0.88	560	7.4	1936	2.3	2.9	5.5	1380

[1] On request

Marine steel motors

Technical data, Non-Essential/Essential Services

IP 55 - IC 411 - temperature rise 90 K

Output kW	Motor type		Product code		Speed r/min	Effi-ciency %	Power factor cos φ	Current I_N A	Current I_s / I_N	Torque T_N Nm	Torque T_s / T_N	Torque T_{max} / T_N
1000 r/min = 6 poles					**380 V 50 Hz**				**Basic design**			
45	**M2CA**	**280 SA**	3GCA	283 110-••A	988	94.0	0.83	89	6.0	434	2.3	2.3
55	**M2CA**	**280 SMA**	3GCA	283 210-••A	988	94.3	0.84	106	6.0	531	2.3	2.3
75	**M2CA**	**315 SA**	3GCA	313 110-••A	991	94.8	0.82	146	6.6	723	2.0	2.4
90	**M2CA**	**315 SMA**	3GCA	313 210-••A	990	95.2	0.84	173	6.4	868	2.0	2.4
110	**M2CA**	**315 MB**	3GCA	313 320-••A	990	95.1	0.84	212	6.5	1061	2.2	2.5
132	**M2CA**	**315 LA**	3GCA	313 510-••A	988	95.3	0.84	252	6.0	1275	2.1	2.4
132	**M2CA**	**355 SA**	3GCA	353 110-••C	991	95.2	0.85	248	6.1	1272	1.8	2.2
160	**M2CA**	**355 SB**	3GCA	353 120-••C	991	95.4	0.84	302	6.5	1542	2.0	2.2
200	**M2CA**	**355 MA**	3GCA	353 310-••C	991	95.7	0.84	377	6.8	1927	2.1	2.3
250	**M2CA**	**355 MB**	3GCA	353 320-••C	993	96.0	0.83	477	7.2	2404	2.5	2.7
315	**M2CA**	**355 LKD**	3GCA	353 840-••C	991	96.1	0.83	597	6.8	3035	2.3	2.4
355	**M2CA**	**400 MLA**	3GCA	402 410-••C	993	96.5	0.85	655	6.6	3414	1.8	2.2
400	**M2CA**	**400 MLB**	3GCA	402 420-••C	993	96.5	0.85	735	7.2	3847	2.0	2.5
450	**M2CA**	**400 LKA**	3GCA	402 810-••C	993	96.7	0.84	838	7.3	4327	2.0	2.4
500	**M2CA**	**400 LKB**	3GCA	402 820-••C	993	96.7	0.84	930	7.2	4808	2.1	2.3
1000 r/min = 6 poles					**380 V 50 Hz**				**High-output design**			
75	**M2CA**	**280 MB**	3GCA	283 320-••A	988	94.5	0.84	144	6.7	723	2.5	2.4
90	**M2CA**	**280 MC**	3GCA	283 330-••A	988	94.8	0.84	174	6.8	869	2.6	2.6
110	**M2CA**	**280 MD**	3GCA	283 340-••A	988	95.1	0.84	210	7.1	1061	2.8	2.7
750 r/min = 8 poles					**380 V 50 Hz**				**Basic design**			
37	**M2CA**	**280 SA**	3GCA	284 110-••A	740	93.2	0.80	75	6.8	477	1.6	2.8
45	**M2CA**	**280 SMA**	3GCA	284 210-••A	740	93.8	0.80	92	7.1	580	1.7	2.9
55	**M2CA**	**315 SA**	3GCA	314 110-••A	740	93.9	0.82	108	6.6	710	1.5	2.5
75	**M2CA**	**315 SMA**	3GCA	314 210-••A	739	94.3	0.82	148	6.5	969	1.6	2.5
90	**M2CA**	**315 MB**	3GCA	314 320-••A	739	94.6	0.83	175	6.7	1163	1.6	2.5
110	**M2CA**	**315 LA**	3GCA	314 510-••A	738	94.7	0.84	213	6.4	1423	1.6	2.4
110	**M2CA**	**355 SA**	3GCA	354 110-••C	742	94.8	0.81	216	5.5	1416	0.8	2.2
132	**M2CA**	**355 MA**	3GCA	354 310-••C	742	95.1	0.81	259	5.6	1699	0.9	2.2
160	**M2CA**	**355 MB**	3GCA	354 320-••C	743	95.3	0.81	315	6.2	2056	1.1	2.4
750 r/min = 8 poles					**380 V 50 Hz**				**High-output design**			
55	**M2CA**	**280 MB**	3GCA	284 320-••A	740	94.2	0.81	110	7.3	709	1.7	2.9

[1] On request

The bullets in the product code indicate choice of mounting arrangement, voltage and frequency, generation code (see ordering information page).

3

Marine steel motors

Technical data, Non-Essential/Essential Services

IP 55 - IC 411 - temperature rise 90 K

Output kW	Motor type		Speed r/min	Effi-ciency %	Power factor cos φ	Current I_N A	Current I_s/I_N	Torque T_N Nm	Torque T_s/T_N	Torque T_{max}/T_N	Moment of inertia J=1/4 GD² kgm²	Weight kg
1200 r/min = 6 poles			**440 V 60 Hz**					**Basic design**				
55	**M2CA**	**280 SA**	1186	94.3	0.83	92	6.0	443	2.1	2.2	1.65	440
63	**M2CA**	**280 SMA**	1187	94.8	0.83	105	6.2	507	2.2	2.3	2	475
86	**M2CA**	**315 SA**	1190	94.8	0.83	144	6.8	690	2.0	2.5	2.9	630
105	**M2CA**	**315 SMA**	1190	95.3	0.84	172	6.5	843	2.0	2.4	3.8	720
125	**M2CA**	**315 MB**	1190	95.5	0.84	205	6.9	1003	2.2	2.5	4.5	805
150	**M2CA**	**315 LA**	1188	95.5	0.84	247	6.3	1206	2.2	2.5	5.4	910
160	**M2CA**	**355 SA**	1190	95.2	0.85	260	5.9	1284	1.6	2.0	6.8	1150
195	**M2CA**	**355 SB**	1190	95.4	0.84	317	6.2	1565	1.7	2.1	7.6	1220
230	**M2CA**	**355 MA**	1191	95.7	0.85	373	6.9	1844	2.0	2.3	9	1400
285	**M2CA**	**355 MB**	1192	96.0	0.83	468	7.5	2283	2.5	2.7	10.6	1550
340	**M2CA**	**355 LKD**	1192	96.2	0.83	556	7.3	2724	2.3	2.5	13.2	1900
400	**M2CA**	**400 MLA**	1193	96.5	0.85	635	6.7	3202	1.6	2.2	18	2400
440	**M2CA**	**400 MLB**	1193	96.5	0.86	695	7.5	3522	1.9	2.5	18	2400
500	**M2CA**	**400 LKA**	1193	96.7	0.85	798	7.6	4002	1.9	2.4	21	2700
560	**M2CA**	**400 LKB**	1193	96.7	0.85	892	7.5	4482	2.0	2.3	21	2700
1200 r/min = 6 poles			**440 V 60 Hz**					**High-output design**				
86	**M2CA**	**280 MB**	1188	94.7	0.84	143	6.9	691	2.5	2.5	2.6	545
105	**M2CA**	**280 MC**	1187	94.9	0.84	175	6.9	845	2.5	2.6	3.1	815
125	**M2CA**	**280 MD**	1188	95.2	0.84	206	7.6	1005	2.8	2.8	4.1	835
900 r/min = 8 poles			**440 V 60 Hz**					**Basic design**				
43	**M2CA**	**280 SA**	890	93.6	0.81	75	6.7	461	1.5	2.7	1.85	460
55	**M2CA**	**280 SMA**	889	94.0	0.81	95	7.0	591	1.5	2.7	2.2	500
63	**M2CA**	**315 SA**	889	94.0	0.82	107	6.5	677	1.4	2.4	2.9	630
85	**M2CA**	**315 SMA**	889	94.5	0.83	144	6.6	913	1.5	2.4	3.8	715
105	**M2CA**	**315 MB**	888	94.7	0.83	175	6.6	1129	1.5	2.4	4.5	800
125	**M2CA**	**315 LA**	888	94.8	0.84	206	6.5	1344	1.5	2.4	5.4	900
125	**M2CA**	**355 SA**	892	95.0	0.82	210	5.5	1338	1.1	2.2	6.8	1150
150	**M2CA**	**355 MA**	892	95.2	0.82	252	5.6	1606	0.8	2.2	7.6	1220
180	**M2CA**	**355 MB**	893	95.4	0.81	305	6.3	1925	1.0	2.3	9	1400
900 r/min = 8 poles			**440 V 60 Hz**					**High-output design**				
65	**M2CA**	**280 MB**	889	94.6	0.82	110	7.1	698	1.5	2.8	2.85	575

[1] On request

[2] Not available for 440 V 60 Hz.

3

Marine steel motors, two speed

Technical data, Non-Essential/Essential Services

IP 55 - IC 411 - temperature rise 90 K

Output kW	Motor type		Product code		Speed r/min	Effi-ciency %	Power factor cos φ	Current I_N A	Current I_s / I_N	Torque T_N Nm	Torque T_s / T_N	Torque T_{max} / T_N
1500/1000 r/min = 4/6 poles					**380 V 50 Hz**		**Fan drive, two separate windings**					
60/18.5	**M2CA**	**280 SA**	3GCA	288 114-••A	1485/990	93.3/78.5	0.84/0.78	116/41	7.1/6.7	386/386	2.0/2.6	2.7/2.3
73/25	**M2CA**	**280 SMA**	3GCA	288 214-••A	1486/990	93.8/89.0	0.85/0.78	141/56	7.4/7.0	469/469	2.3/2.8	2.7/2.4
84/27	**M2CA**	**280 MB**	3GCA	288 324-••A	1484/990	94.1/89.5	0.87/0.79	158/58	7.1/7.1	541/541	2.2/2.8	2.6/2.6
110/32	**M2CA**	**315 SMA**	3GCA	318 214-••A	1487/990	94.8/90.6	0.85/0.79	214/70	6.5/5.8	706/706	1.7/2.2	2.4/2.4
125/38	**M2CA**	**315 MB**	3GCA	318 324-••A	1488/991	95.2/91.9	0.86/0.78	232/81	6.5/6.2	802/802	1.8/2.4	2.4/2.5
150/45	**M2CA**	**315 LA**	3GCA	318 514-••A	1485/989	95.4/91.0	0.86/0.78	278/96	6.2/5.2	965/965	1.9/2.1	2.6/2.2
180/55	**M2CA**	**355 MA**	3GCA	358 314-••A	1488/990	95.3/92.8	0.90/0.82	320/110	7.0/6.8	1155/530	1.3/1.6	2.9/2.8
240/75	**M2CA**	**355 LA**	3GCA	358 514-••A	1487/988	95.7/92.0	0.90/0.85	425/145	7.7/6.0	1541/725	1.5/1.4	3.1/2.3
1500/750 r/min = 4-8 poles					**380 V 50 Hz**		**Fan drive, Dahlander connection**					
65/15	**M2CA**	**280 SA**	3GCA	288 119-••A	1482/741	93.1/90.0	0.85/0.64	124/40	6.9/4.7	419/419	2.4/2.4	2.6/2.1
77/20	**M2CA**	**280 SMA**	3GCA	288 219-••A	1485/741	93.7/91.2	0.84/0.65	148/51	8.1/5.0	495/495	2.9/2.5	3.1/2.3
85/23	**M2CA**	**280 MB**	3GCA	288 239-••A	1486/741	94.1/91.6	0.86/0.67	161/57	8.6/4.9	546/546	3.3/2.4	3.3/2.5
99/20	**M2CA**	**315 SMA**	3GCA	318 219-••A	1487/744	94.5/92.4	0.85/0.62	187/53	6.8/4.9	636/636	1.9/2.1	2.6/2.5
120/23	**M2CA**	**315 MB**	3GCA	318 329-••A	1486/746	94.8/92.9	0.86/0.64	224/59	6.8/4.8	771/771	2.0/2.0	2.6/2.4
144/29	**M2CA**	**315 LA**	3GCA	318 519-••A	1486/743	95.1/93.3	0.86/0.64	268/74	7.0/4.8	925/925	2.1/2.1	2.7/2.5
180/36	**M2CA**	**355 MA**	3GCA	358 319-••A	1488/744	95.1/93.6	0.89/0.67	320/90	7.5/5.1	1155/462	1.4/1.3	2.9/2.6
230/50	**M2CA**	**355 LA**	3GCA	358 519-••A	1490/743	95.4/94.3	0.88/0.67	420/120	8.2/5.3	1474/642	1.6/1.4	3.3/2.5
1500/1000 r/min = 4/6 poles					**380 V 50 Hz**		**Constant torque, two separate windings**					
50/32	**M2CA**	**280 SA**	3GCA	289 114-••A	1487/987	92.2/90.8	0.83/0.78	101/69	7.3/6.3	321/321	2.2/2.6	2.8/2.2
60/40	**M2CA**	**280 SMA**	3GCA	289 214-••A	1488/988	92.7/91.8	0.83/0.77	119/86	7.7/6.8	385/385	2.3/2.9	3.0/2.3
68/45	**M2CA**	**280 MB**	3GCA	289 324-••A	1488/989	93.2/92.4	0.85/0.78	130/94	7.6/7.1	436/436	2.3/3.1	2.9/2.3
81/54	**M2CA**	**315 SMA**	3GCA	319 214-••A	1488/990	94.2/93.4	0.86/0.77	152/114	5.9/5.8	520/520	1.5/2.6	2.3/2.4
99/67	**M2CA**	**315 MB**	3GCA	319 324-••A	1490/989	94.8/93.8	0.86/0.79	185/137	6.8/5.6	635/635	1.9/2.7	2.6/2.3
120/80	**M2CA**	**315 LA**	3GCA	319 514-••A	1489/990	95.0/94.0	0.85/0.76	226/172	6.7/6.0	770/770	1.9/3.1	2.7/2.7
140/93	**M2CA**	**315 LB**	3GCA	319 524-••A	1491/990	95.2/94.4	0.85/0.79	265/190	7.4/5.8	896/896	2.1/2.8	2.7/2.3
180/120	**M2CA**	**355 MA**	3GCA	359 314-••A	1486/992	95.0/94.2	0.90/0.82	320/237	6.8/6.8	1156/1155	1.2/1.7	2.7/2.9
210/140	**M2CA**	**355 LA**	3GCA	359 514-••A	1488/990	95.1/94.3	0.89/0.82	380/275	7.6/6.9	1347/1350	1.3/1.7	3.3/2.9
1500/750 r/min = 4-8 poles					**380 V 50 Hz**		**Constant torque, Dahlander-connection**					
50/32	**M2CA**	**280 SA**	3GCA	289 119-••A	1484/742	92.9/92.3	0.89/0.73	92/71	6.7/6.7	321/321	1.8/2.4	2.4/2.4
65/40	**M2CA**	**280 SMA**	3GCA	289 219-••A	1483/742	92.9/92.5	0.89/0.72	120/92	7.0/6.7	419/419	1.9/2.7	2.5/2.5
78/50	**M2CA**	**280 MB**	3GCA	289 329-••A	1487/742	93.9/93.0	0.89/0.71	142/114	8.4/7.3	501/501	2.4/2.9	2.9/2.6
90/58	**M2CA**	**315 SMA**	3GCA	319 219-••A	1487/742	94.1/93.7	0.89/0.74	163/127	6.5/6.3	578/578	1.5/2.1	2.6/2.5
108/68	**M2CA**	**315 MB**	3GCA	319 329-••A	1486/742	94.4/94.0	0.90/0.74	193/148	7.5/6.5	694/694	1.7/2.2	2.6/2.6
135/85	**M2CA**	**315 LA**	3GCA	319 519-••A	1486/742	94.6/94.1	0.89/0.72	244/191	7.2/6.5	868/868	2.0/2.4	2.8/2.6
150/90	**M2CA**	**355 MA**	3GCA	359 319-••A	1490/740	94.0/93.0	0.90/0.74	275/205	6.5/3.4	961/1161	1.2/1.0	2.3/1.9
180/120	**M2CA**	**355 LA**	3GCA	359 519-••A	1486/741	95.0/94.5	0.90/0.73	320/265	6.5/4.5	1156/1546	1.3/1.3	2.6/2.0

The bullets in the product code indicata choice of mounting arrangement, voltage and frequency, generation code (see ordering information)

Marine steel motors, two speed

Technical data, Non-Essential/Essential Services

IP 55 - IC 411 - temperature rise 90 K

Output kW	Motor type		Speed r/min	Effi-ciency %	Power factor cos φ	Current I_N / A	Current I_s / I_N	Torque T_N / Nm	Torque T_s / T_N	Torque T_{max} / T_N	Moment of inertia J=1/4 GD² kgm²	Weight kg
1800/1200 r/min = 4/6 poles				**440 V 60 Hz**		**Fan drive, two separate windings**						
69/21	**M2CA**	**280 SA**	1784/1190	93.3/88.5	0.85/0.78	116/41	7.2/7.2	369/169	1.9/2.8	2.7/2.4	1.15	445
85/29	**M2CA**	**280 SMA**	1785/1190	93.9/89.5	0.85/0.78	140/56	7.6/7.4	455/233	2.1/2.9	2.7/2.5	1.4	490
97/31	**M2CA**	**280 MB**	1784/1190	94.2/90.3	0.87/0.79	155/58	7.3/7.7	519/249	2.1/3.1	2.6/2.7	1.7	550
125/38	**M2CA**	**315 SMA**	1787/1189	94.6/90.9	0.85/0.79	206/72	6.8/6.0	668/305	1.6/2.2	2.6/2.4	2.3	730
140/42	**M2CA**	**315 MB**	1788/1191	95.2/92.2	0.86/0.78	226/77	6.8/7.0	748/337	1.7/2.7	2.5/2.8	2.9	850
165/50	**M2CA**	**315 LA**	1786/1188	95.3/92.0	0.86/0.78	267/90	6.6/6.0	882/402	2.0/2.4	2.8/2.4	3.5	970
210/65	**M2CA**	**355 MA**	1788/1190	95.1/92.6	0.90/0.82	320/110	7.0/6.8	1121/521	1.2/1.5	2.8/2.7	6.5	1350
270/85	**M2CA**	**355 LA**	1787/1188	95.5/91.8	0.90/0.85	410/145	7.7/6.0	1443/683	1.4/1.3	3.0/2.2	7.8	1550
1800/900 r/min = 4-8 poles				**440 V 60 Hz**		**Fan drive, Dahlander connection**						
75/17,5	**M2CA**	**280 SA**	1783/891	93.2/90.5	0.86/0.64	123/40	7.0/4.8	402/188	2.2/2.4	2.6/2.1	1.15	445
88/23	**M2CA**	**280 SMA**	1785/891	93.8/91.7	0.85/0.65	145/51	8.4/5.1	471/247	2.8/2.5	3.2/2.3	1.4	490
98/27	**M2CA**	**280 MB**	1785/891	94.2/92.0	0.86/0.67	160/58	8.9/5.0	524/289	3.2/2.3	3.3/2.5	1.7	550
115/23	**M2CA**	**315 SMA**	1787/894	94.3/92.2	0.85/0.62	188/53	6.8/4.9	614/246	1.7/1.9	2.6/2.5	2.3	730
138/26	**M2CA**	**315 MB**	1786/893	94.6/92.7	0.86/0.64	223/58	6.8/4.8	739/277	1.8/1.8	2.6/2.4	2.9	850
165/33	**M2CA**	**315 LA**	1786/893	94.9/93.1	0.86/0.64	265/73	7.0/4.8	882/353	1.9/1.9	2.7/2.5	3.5	970
200/40	**M2CA**	**355 MA**	1788/894	94.9/93.4	0.89/0.67	310/85	7.5/5.1	1068/427	1.3/1.2	2.8/2.5	6.5	1350
260/55	**M2CA**	**355 LA**	1790/893	95.2/94.1	0.88/0.67	410/115	8.2/5.3	1387/588	1.5/1.3	3.2/2.4	7.8	1550
1800/1200 r/min = 4/6 poles				**440 V 60 Hz**		**Constant torque, two separate windings**						
58/37	**M2CA**	**280 SA**	1787/1187	92.3/91.5	0.83/0.78	100/68	7.5/6.6	310/298	2.0/2.6	2.8/2.3	1.15	445
69/46	**M2CA**	**280 SMA**	1788/1188	92.9/92.4	0.83/0.77	117/84	8.0/7.3	369/369	2.2/3.0	3.0/2.4	1.4	490
78/52	**M2CA**	**280 MB**	1788/1188	93.3/92.8	0.86/0.79	128/94	7.9/7.4	417/418	2.3/3.1	3.0/2.4	1.7	550
93/62	**M2CA**	**315 SMA**	1788/1190	94/93.2	0.86/0.77	151/113	5.9/5.8	497/497	1.4/2.4	2.3/2.4	2.3	730
115/77	**M2CA**	**315 MB**	1790/1189	94.6/93.6	0.86/0.79	185/137	6.8/5.6	613/618	1.7/2.4	2.6/2.3	2.9	850
138/92	**M2CA**	**315 LA**	1789/1190	94.8/93.8	0.85/0.76	225/170	6.7/6.0	737/738	1.7/2.7	2.7/2.7	3.5	970
160/108	**M2CA**	**315 LB**	1790/1190	95/94.2	0.85/0.79	260/191	7.2/5.8	853/867	1.9/2.5	2.7/2.3	3.9	1000
210/140	**M2CA**	**355 MA**	1786/1192	94.8/94	0.90/0.82	325/240	6.8/6.8	1123/1121	1.1/1.6	2.6/2.8	6.5	1350
240/160	**M2CA**	**355 LA**	1788/1190	94.9/94.1	0.89/0.82	375/270	7.6/6.9	1281/1284	1.2/1.6	3.2/2.8	7.8	1550
1800/900 r/min = 4-8 poles				**440 V 60 Hz**		**Constant torque, Dahlander-connection**						
58/37	**M2CA**	**280 SA**	1784/892	92.7/92.5	0.89/0.73	92/72	6.7/6.7	310/396	1.7/2.4	2.4/2.4	1.85	460
75/46	**M2CA**	**280 SMA**	1784/892	93.1/93.0	0.89/0.73	119/90	7.1/7.0	401/492	1.8/2.6	2.5/2.5	2.2	500
90/58	**M2CA**	**280 MB**	1786/892	93.9/93.5	0.90/0.73	140/113	8.6/7.6	481/261	2.3/2.9	2.9/2.6	2.85	575
104/67	**M2CA**	**315 SMA**	1787/892	93.9/93.5	0.89/0.74	163/127	6.5/6.3	556/717	1.4/1.9	2.6/2.5	4.1	755
124/78	**M2CA**	**315 MB**	1786/892	94.2/93.8	0.90/0.74	192/147	7.5/6.5	663/835	1.5/2.0	2.6/2.6	4.9	845
155/98	**M2CA**	**315 LA**	1786/892	94.4/93.9	0.89/0.72	242/190	7.2/6.5	829/1049	1.8/2.2	2.8/2.6	5.8	950
170/100	**M2CA**	**355 MA**	1790/890	93.8/92.8	0.90/0.74	265/190	6.5/3.4	907/1073	1.1/0.9	2.2/1.8	6.5	1350
210/140	**M2CA**	**355 LA**	1786/891	94.8/94.3	0.90/0.73	325/265	6.5/4.5	1123/1500	1.2/1.2	2.5/1.9	7.8	1550

Marine steel motors - Variant codes

Code [1]	Variant	Motor size			
		280	315	355	400
Balancing					
052	Vibration acc. to grade A (IEC 60034-14).	S	S	S	S
417	Vibration acc. to Grade B (IEC 60034-14).	P	P	P	P
423	Balanced without key.	P	P	P	P
424	Full key balancing.	P	P	P	P
Bearings and lubrication					
036	Transport lock for bearings.	M	M	M	P
037	Roller bearing at D-end.	M	M	M	R
040	Heat resistant grease (-25... +150°C).	M	M	M	P
041	Bearings regreasable via grease nipples.	S	S	S	S
042	Locked drive-end. Standard for sizes 112-132, flanged versions.	S	S	S	S
043	SPM nipples.	M	M	M	P
058	Angular contact ball bearing at D-end, shaft force away from bearing. Transport lock included.	P	P	P	P
060	Angular contact ball bearing at D-end, shaft force towards bearing.	P	P	P	P
107	Pt-100 2-wire in bearings.	P	P	P	P
130	Pt-100 3-wire in bearings.	P	P	P	P
188	63-series bearings.	S	S	S	S
420	Bearing mounted PTC thermistors.	P	P	P	P
796	Grease nipples JIS B 1575 Pt 1/8 Type A. Stainless steel. Head type to be defined when ordering.	M	M	M	P
Branch standard design					
142	Manilla connection.	P	P	R	R
178	Stainless steel/acid proof bolts.	P	P	P	P
209	Non-standard voltage or frequency (special winding).	P	P	P	P
425	Corrosion protected stator and rotor core.	P	P	P	P
Cooling system					
044	Unidirectional fan, clockwise seen from D-end.	P	P	P	P
045	Unidirectional fan, counter clockwise seen from D-end.	P	P	P	P
053	Metal fan cover.	S	S	S	S
068	Metal fan.	P	P	P	P
075	Cooling method IC 418 (without fan).	R	R	R	R
Coupling					
035	Assembly of customer supplied coupling-half.	P	P	P	P
Dimension drawing					
141	Binding dimension drawing.	M	M	M	M
Drain holes					
065	Plugged existing drain holes.	M	M	M	P
Earthing bolt					
067	External earthing bolt.	M	M	M	P
Heating elements					
450	Heating element, 100-120 V.	M	M	M	P
451	Heating element, 200-240 V.	M	M	M	P
Mounting arrangements					
009	IM 2001 foot/flange mounted, from IM 1001 (B35 from B3).	M	M	M	P
066	Modified for non-standard mounting position. (please specify IM xxxx). Must be ordered for all mounting arrangements excluding IM B3 (1001) and B5 (3001).	M	M	M	P

[1] Certain variant codes cannot be used simultaneously.

S = Included as standard.
M = On modification of a stocked motor, or on new manufacture, the number per order may be limited.
P = New manufacture only.
R = On request.
NA = Not applicable.

Code [1]	Variant	Motor size			
		280	315	355	400
Painting					
114	Special paint colour, standard grade. RAL-colour no. must be specified.	M	M	M	P
179	Special paint specification.	R	R	R	R
Protection					
005	Protective roof, vertical motor, shaft down.	M	M	M	P
072	Radial seal at D-end.	M	M	M	P
158	Degree of protection IP65. Dust proof version.	M	M	M	P
403	Degree of protection IP 56.	M	M	M	P
Rating & instruction plates					
002	Restamping voltage, frequency and output, continuous duty.	M	M	M	P
003	Individual serial number.	S	S	S	S
095	Restamping output (maintained voltage, frequency), intermittent duty.	M	M	M	P
135	Mounting of additional identification plate, stainless.	M	M	M	P
139	Additional identification plate delivered loose.	M	M	M	P
161	Additional rating plate delivered loose.	M	M	M	P
Shaft & rotor					
069	Two shaft extensions as per basic catalogue.	P	P	P	P
070	One or two special shaft extensions, std shaft material.	P	P	P	P
165	Shaft extension with open keyway.	S	S	S	S
410	Stainless steel shaft (standard or non-std design).	P	P	P	P
Standards and regulations					
024	Fulfilling Bureau Veritas (BV) requirements, Essential Service.	M	P	P	P
025	Fulfilling Det Norske Veritas (DNV) requirements, Essential Service	M	P	P	P
026	Fulfilling Lloyds Register of Shipping (LR) requirements, Essential Service.	M	P	P	P
027	Fulfilling American Bureau of Shipping (ABS) requirements, Essential Service.	M	P	P	P
049	Fulfilling Germanischer Lloyd (GL) requirements, Essential Service.	P	P	P	P
050	Fulfilling Registro Italiano Navale (RINA) requirements, Essential Service.	M	P	P	P
051	Fulfilling Russian Maritime Register of Shipping (RS) requirements, Essential Service.	P	P	P	P
096	Fulfilling Lloyds Register of Shipping (LR) Non-Essential Service	M	P	P	P
153	Reduced test for classification society.	P	P	P	P
186	Fulfilling Det Norske Veritas (DNV) requirements Non-Essential Service	M	P	P	P
481	Fulfilling Nippon Kaiji Kyokai (NK) requirements, Essential Service.	M	P	P	P
483	Fulfilling China Classification Societies (CCS) requirements (Beijing), Essential Service.	M	P	P	P
484	Fulfilling Korea Register of Shipping (KR) requirements, Essential Service.	M	P	P	P
485	Fulfilling China Corporational Register of Shipping (CR) requirements (Taipei), Essential Service.	NA	NA	NA	NA
491	Fulfilling Nippon Kaiji Kyokai (NK) requirements, Non-Essential Service.	M	P	P	P
492	Fulfilling Registro Italiano Navale (RINA) requirements, Non-Essential Service.	M	P	P	P
493	Fulfilling China Classification Societies (CCS) Requirements (Beijing), Non-Essential Service.	P	P	P	P
494	Fulfilling Korea Register of Shipping (KR) requirements, Non-Essential Service.	M	P	P	P
495	Fulfilling China Corporational Register of Shipping (CR) requirements (Taipei), Non-Essential Service.	NA	NA	NA	NA
496	Fulfilling Bureau Veritas (BV) requirements, Non-Essential Service.	M	P	P	P
497	Fulfilling Russian Maritime Register of Shipping (RS) requirements, Non-Essential Service.	P	P	P	P
Stator winding temperature sensors					
120	KTY 84-130 (1 per phase) in stator winding.	P	P	P	P
121	Bimetal detectors, break type (NCC), (3 in series), 130°C, in stator winding.	M	M	M	P
122	Bimetal detectors, break type (NCC), (3 in series), 150°C, in stator winding.	M	M	M	P
123	Bimetal detectors, break type (NCC), (3 in series), 170°C, in stator winding.	M	M	M	P

[1] Certain variant codes cannot be used simultaneously.

S = Included as standard.
M = On modification of a stocked motor, or on new manufacture, the number per order may be limited.
P = New manufacture only.
R = On request.
NA = Not applicable.

3

Code [1]	Variant	Motor size			
		280	315	355	400
125	Bimetal detectors, break type (NCC), (2x3 in series), 150°C, in stator winding.	M	M	M	P
127	Bimetal detectors, break type (NCC), (3 in series, 130°C & 3 in series, 150°C), in stator winding.	M	M	M	P
435	PTC-thermistors (3 in series), 130°C, in stator winding.	M	M	M	P
436	PTC-thermistors (3 in series), 150°C, in stator winding.	S	S	S	S
437	PTC-thermistors (3 in series), 170°C, in stator winding.	M	M	M	P
439	PTC - thermistors (2x3 in series), 150°C, in stator winding.	M	M	M	M
441	PTC-thermistors (3 in series, 130°C & 3 in series, 150°C), in stator winding.	M	M	M	M
442	PTC-thermistors (3 in series, 150°C & 3 in series, 170°C), in stator winding.	M	M	M	M
445	Pt-100 2-wire in stator winding. 1 per phase.	M	M	M	P
446	Pt-100 2-wire in stator winding, 2 per phase.	M	M	M	P
502	Pt-100 3-wire in stator winding, 1 per phase.	M	M	M	P
503	Pt-100 3-wire in stator winding, 2 per phase.	M	M	M	P
Terminal box					
019	Larger than standard terminal box.	R	R	R	R
021	Terminal box LHS, seen from Δ-end (= L prod.code).	P	P	P	P
180	Terminal box on RHS, seen from Δ-end (= R prod.code).	P	P	P	P
136	Extended cable connection, standard terminal box.	R	R	R	R
137	Extended cable connection, low terminal box., Flying leads.	R	R	R	R
157	Terminal box degree of protection IP 65.	M	M	M	P
187	Cable glands of non-standard design.	R	R	R	R
230	Standard metal cable glands.	S	S	S	S
402	Terminal box adapted for Al cables.	S	S	S	S
413	Extended cable connection, no terminal box.	P	P	P	P
418	Separate terminal box for auxiliaries, standard material.	P	P	P	P
468	Cable entry from D-end.	P	P	P	P
469	Cable entry from N-end.	P	P	P	P
731	Two standard metal cable glands.	S	S	S	S
Testing					
145	Type test report from a catalogue motor, 400 V 50 Hz.	M	M	M	P
146	Type test with report for motor from specific delivery batch.	P	P	P	P
147	Type test report with motor from spec. del. batch, customer witnessed.	P	P	P	P
148	Routine test report. Witnessed routine test = 146	M	M	M	P
149	Test according to separate test specification.	R	R	R	R
221	Type test and multi-point load test with report for motor from specific delivery batch.	R	R	R	R
222	Torque/speed curve, type test and multi-point load test with report from specific delivery batch.	P	P	P	P
760	Vibration level test.	P	P	P	P
761	Vibration spectrum test.	P	P	P	P
762	Noise level test.	P	P	P	P
763	Noise spectrum test.	P	P	P	P
Variable speed drives					
701	Insulated bearing at N-end. For fan and pump duty up to 500V.	M	M	M	P
Y/Δ-starting					
117	Terminals for Y/Δ start at both speeds (two-speed separate windings).	P	P	R	R
118	Terminals for Y/Δ start at high speed (two-speed separate windings).	P	P	R	R
119	Terminals for Y/Δ start at low speed (two-speed separate windings).	P	P	R	R

[1] Certain variant codes cannot be used simultaneously.

S = Included as standard.
M = On modification of a stocked motor, or on new manufacture, the number per order may be limited.
P = New manufacture only.
R = On request.
NA = Not applicable.

Marine steel motors

Dimension drawings

Foot mounted motor IM 1001, B3

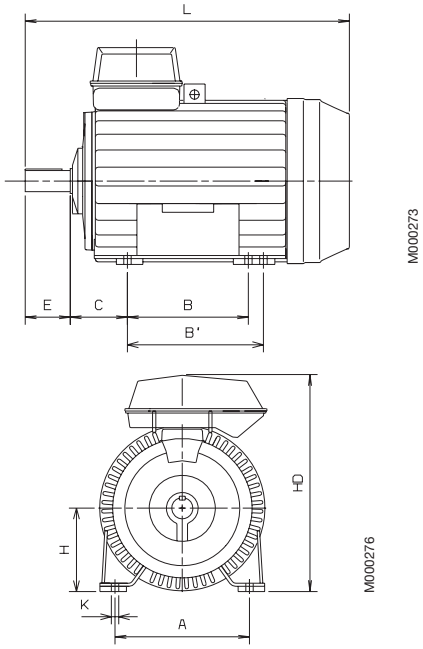

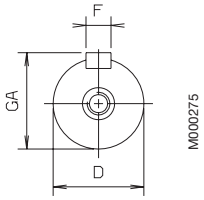

Flange mounted motor IM 3001, B5

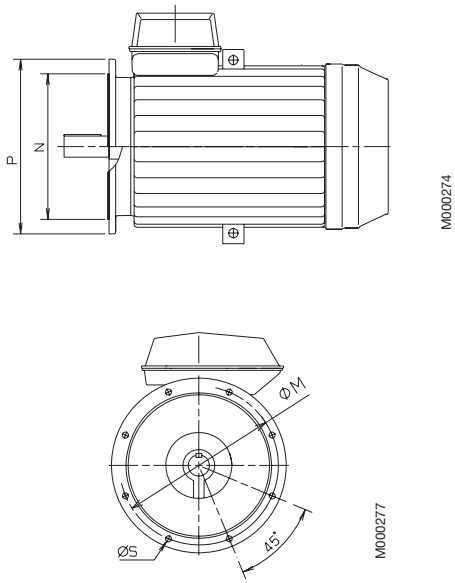

Motor size	IM 1001, B3 and IM 3001, B5										IM 1001, B3							IM 3001, B5			
	D		GA		F		E		L max												
	poles		poles		poles		poles		poles												
	2	4-8	2	4-8	2	4-8	2	4-8	2	4-8	A	B	B'	C	HD	K	H	M	N	P	S
280 SA	65	75	69	79.5	18	20	140	140	1060	990	457	368	-	190	730	24	280	500	450	550	18
280 SMA	65	75	69	79.5	18	20	140	140	1060	1060	457	368	419	190	730	24	280	500	450	550	18
280 MB	65	75	69	79.5	18	20	140	140	1120	1120	457	419	-	190	730	24	280	500	450	550	18
280 MC	65	75	69	79.5	18	20	140	140	1255	1255	457	419	-	190	730	24	280	500	450	550	18
280 MD	65	75	69	79.5	18	20	140	140	1255	1255	457	419	-	190	730	24	280	500	450	550	18
315 SA	65	80	69	85	18	22	140	170	1095	1125	508	406	-	216	820	28	315	600	550	660	23
315 SMA	65	80	69	85	18	22	140	170	1195	1125	508	406	457	216	820	28	315	600	550	660	23
315 MB	65	80	69	85	18	22	140	170	1195	1225	508	457	-	216	820	28	315	600	550	660	23
315 LA	65	90	69	95	18	25	140	170	1265	1295	508	508	-	216	820	28	315	600	550	660	23
315 LB	65	90	69	95	18	25	140	170	1545	1575	508	508	-	216	820	28	315	600	550	660	23
315 LC	65	90	69	95	18	25	140	170	1545	1575	508	508	-	216	848	28	315	600	550	660	23
355 SA, SB	70	100	74.5	106	20	28	140	210	1317	1387	610	500	-	254	900	28	355	740	680	800	23
355 MA, MB	70	100	74.5	106	20	28	140	210	1377	1447	610	560	-	254	915	28	355	740	680	800	23
355 LA, LB	70	100	74.5	106	20	28	140	210	1457	1527	610	630	-	254	915	28	355	740	680	800	23
355 LKD	-	100	-	106	-	28	-	210	-	1667	610	630	710	254	915	28	355	740	680	800	23
400 MLA, MLB	70	100	74.5	106	20	28	140	210	1628	1698	686	630	710	280	1000	35	400	740	680	800	23
400 LKA, LKB	80	100	85	106	22	28	170	210	1798	1838	686	710	800	280	1000	35	400	740	680	800	23

Above table gives the main dimensions in mm.

For detailed drawings please see our web site 'www.abb.com/motors&drives or contact us.

Marine steel motors in brief, basic design

Motor frame size			280	315	355	400
Stator	Material		Profile-pressed sheet steel.			
	Paint colour shade		Blue, Munsell 8B 4.5/3.25 (NCS 4822-B05G)			
	Paint thickness		Two-pack epoxy paint, thickness ≥ 70 µm			
Bearing end shields	Material		Cast iron EN-GJL-200 or spheroidal graphit EN-GJS-400.			
	Paint colour shade		Blue, Munsell 8B 4.5/3.25 (NCS 4822-B05G)			
	Paint thickness		Two-pack epoxy paint, thickness ≥ 70 µm			
Bearings	D-end	2-pole	6316/C4	6316/C4	6316M/C3	6317M/C3
		4-12 poles	6316/C3	6319/C3	6322/C3	6322/C3
	N-end	2-pole	6316/C4	6316/C4	6316M/C3	6317M/C3
		4-12 poles	6316/C3	6316/C3	6319/C3	6319/C3
Axially-locked bearings	Inner bearing cover		As standard, locked at D-end.			
Bearing seal			V-ring as standard, radial seal on request.			2-pole labyrinth seal
Lubrication			Regreasing nipples, M10x1.			
			Grease for bearing temperatures -30°C to +120°C.			
SPM-nipples			On request.			
Rating plate			Acid proof stainless steel AISI 316, thickness 0.6 mm, with individual serial number.			
Terminal box	Frame material		Cast iron EN-GJL-150.		Cast iron EN-GJL-250 / GG25 / 2GRS250	
	Cover material		Cast iron EN-GJL-150.		Cast iron EN-GJL-250 / GG25 / GRS250	
	Cover screw material		Steel 8.8., zinc electroplated.			
Connections	Cable	2, 4 pole	2 x M63	2 x M63	2 x Ø60/80	2 x Ø80
	entries	6 pole	2 x M63	2 x M63	2 x Ø60	2 x Ø60/80
	Terminals		6 terminals for connection with cable lugs (not included).			
Fan	Material		Glass fibre reinforced plastic or aluminum.			
Fan cover	Material		Sheet steel.			
	Paint colour shade		Blue, Munsell 8B 4.5/3.25 (NCS 4822-B05G).			
	Paint thickness		Two-pack epoxy polyester paint, thickness ≥ 80 µm.			
Stator winding	Material		Copper.			
	Insulation		Insulation class F.			
	Winding protection		PTC-thermistors 150°C, 3 in series, as standard.			
Rotor winding	Material					
Balancing method			Half key balancing as standard.			
Key way			Open key way.			
Heating elements	On request		50 W	1 x 65 W	2 x 65 W	2 x 65 W
Drain holes			As standard, open on delivery.			
Enclosure			IP 55, higher protection on request.			
Cooling method			IC 411.			

Marine Cast Iron Motors

Totally enclosed squirrel cage three phase low voltage motors, Sizes 71 - 450, 0.25 to 1000 kW

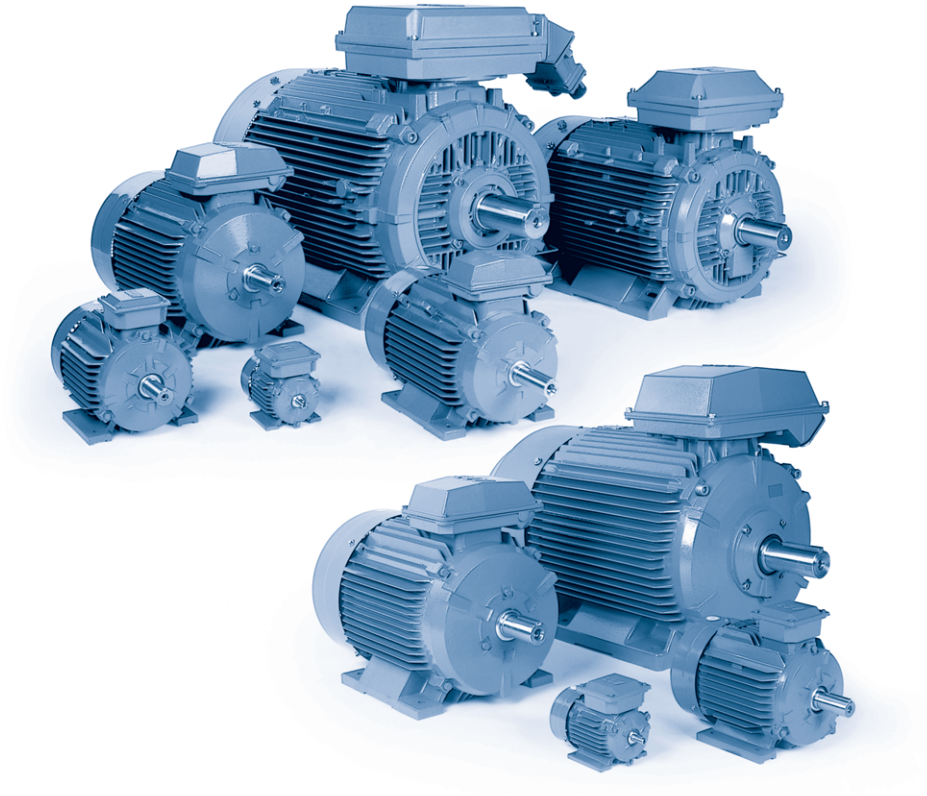

4

www.abb.com/motors&drives

> Motors
>> LV Motors >>> Marine Motors

Mechanical design..... 74

Rating plates..... 90

Ordering information..... 91

Technical data..... 92

Variant codes..... 118

Dimension drawings..... 126

Cast iron motors in brief..... 127

Mechanical design

Stator

The motor frames including feet, bearing housing and terminal box are made of cast iron. Integrally cast feet allow a very rigid mounting and minimal vibration.

Motors can be supplied for foot mounting, flange mounting and combinations of these.

Drain holes

Motors that will be operated in very humid or wet environments, and especially under intermittent duty, should be provided with drain holes. The appropriate IM designation, such as IM 3031, is specified, on the basis of the method of motor mounting.

In the basic design, M2BA 71 to 132 are supplied without drain holes, although these can be provided as an option, see variant codes. Motors M3BP 160 to 450 are fitted with drain holes and closable plugs.

Motor type	Frame size	Drain holes
M2BA	71 to 132	optional
M3BP	160 to 450	open

M2QA motors 71 to 250 are not as standard fitted with drain holes, but can be on request, see variant codes. Motors M2BAT 280 to 355 are supplied with drain holes and closaable plugs.

Motor type	Frame size	Drain holes
M2QA	71 to 250	optional
M2BAT	280 to 355	open

The plugs are open on delivery. When mounting the motors, ensure that the drain holes face downwards. In the case of vertical mounting, the upper plug must be hammered home completely. In very dusty environments, both plugs should be hammered home.

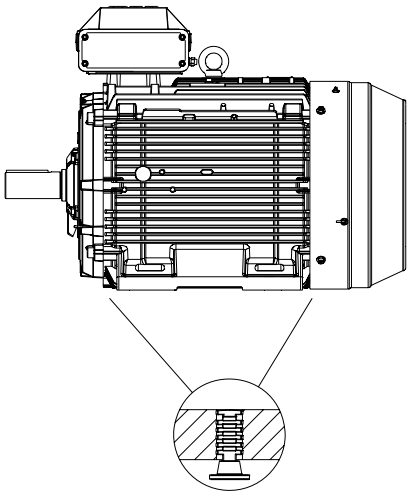

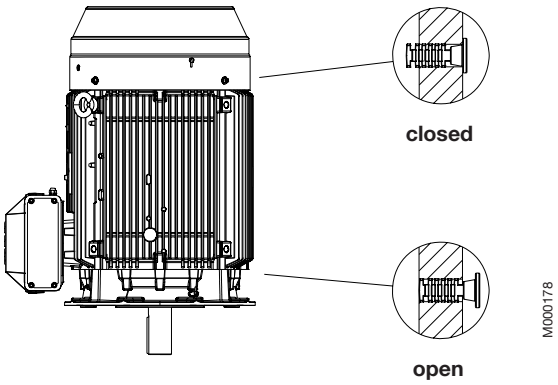

Motor sizes 71 to 132 and M2QA 160 to 250
As standard without drain holes.

Motor sizes M3BP 160 to 450 and M2BAT 280 to 355
As standard with drain holes and closable plugs.

Terminal box

For motors M2BA 71 to 132 and M3BP 160 to 450

Terminal boxes are mounted on the top of the motor as standard. The terminal box can also be mounted on the left or right side, see ordering information.

The terminal box of motors sizes 71 to 400 can be turned 4x90° and in motor size 450 rotated 2x180° to allow cable entry from any side of the motor.

Degree of protection of standard terminal box is IP 55.

Motor sizes 71 to 132 come with cable entries tapped in the terminal box frame, and can be provided with cable glands as an option.

Motors sizes 160 to 250 come with connection flanges with tapped cable entries, and can be provided with cable glands as an option.

In motor siszes 280 to 450 the terminal box is equipped with cable glands or cable boxes as standard, see following pages.

To enable the supply of suitable terminations for the motor, please state cable type, quantity and size when ordering. Non-standard design of terminal boxes; e.g. size, degree of protection, are available as options.

Please see variant code pages for options. Dimension drawings for some terminal boxes can also be found after the motor drawings.

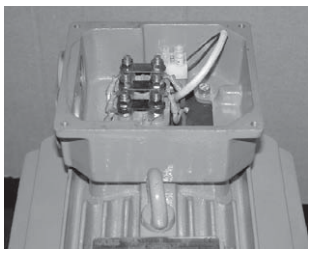

M000061

Terminal box for motor sizes 71 to 132

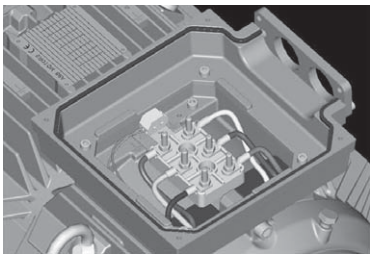

M000055

Terminal box for motor sizes 160 to 250

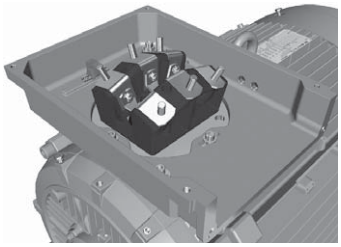

M000056

Terminal box for motor sizes 280 to 450. provided either with a cable gland or a cable box.

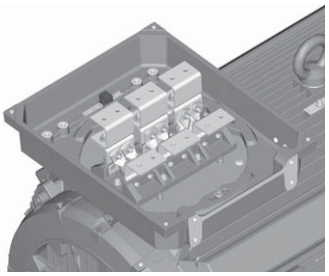

M000108

Terminal box for motor sizes 355 to 450. provided either with a cable gland or a cable box.

Co-ordination of terminal boxes and cable entries

If no ordering information on the cable is given. it is assumed to be p.v.c. -insulated and termination parts are supplied according to the following tables. These are supplied when using variant code ‘230 Standard cable glands’ when ordering.

In motor sizes 280 to 450 the terminal box is equipped with cable glands or cable boxes as standard according to the tables on below and the following pages. The table on next pages show the different alternatives available for cable boxes and cable entries. Other types on request.

Terminal boxes and cable glands
for motors M2BA 71 to 132 and M3BP 160 to 250 **Voltage 220 - 690 V, 50 Hz**

Motor size	Terminal box	Main cable entry	Auxliary cable entries mm	Cable gland diameter area. mm²	Max. connection cable (D/Y conn.)	Max. rated current A	Terminal bolt size
M2BA 71	-	**2 x M16**		Ø5-10	1 x 6		M4
M2BA 80 - 90	-	**2 x M25**		Ø8-13	1 x 6		M4
M2BA 100 - 132	-	**2 x M32**		Ø15-20	1 x 16		M5
M3BP 160 - 180	-	**2 x M40**	1 x M16 x 1.5	Ø19-27	1 x 35	63	M6
M3BP 200 -250	-	**2 x M63**	1 x M16 x 1.5	Ø34-45	1 x 70	160	M10

Motor sizes 280 to 450 – Co-ordination of terminal boxes and cable entries

Motor size	Voltage/ freq. code	Ter-minal box	Top-mounted Flange or adapter	Side-mounted Flange or adapter	Cable box or cable gland	Gland thread	Cable diameter	Max. conn-ection cable area mm²
3000 r/min (2 poles)								
280		210	3GZF294730-749	3GZF294730-749	2x 3GZF294730-613	**2x M63x1.5**	2x Ø32-49	2x150
315SM, ML		370	3GZF294730-753	3GZF294730-753	2x 3GZF294730-613	**2x M63x1.5**	2x Ø32-49	2x240
315LKA, LKB		370	3GZF294730-753	3GZF294730-753	2x 3GZF294730-613	**2x M63x1.5**	2x Ø32-49	2x240
315LKC		750	3GZF294730-944	3GZF294730-759	3GZF294730-301		2x Ø48-60	4x240
355 SMA	D	750	3GZF294730-944	3GZF294730-759	3GZF294730-301		2x Ø48-60	4x240
355 SMA	E	370	3GZF294730-753	3GZF294730-753	2x 3GZF294730-613	**2x M63x1.5**	2x Ø32-49	2x240
355 SMB, SMC		750	3GZF294730-944	3GZF294730-759	3GZF294730-301		2x Ø48-60	4x240
355 ML, LK		750	3GZF294730-944	3GZF294730-759	3GZF294730-501		2x Ø60-80	4x240
400 L, LK		750	3GZF294730-944	3GZF294730-759	3GZF294730-501		2x Ø60-80	4x240
450 LA	D	1200	see option [1]	-	see option [1]		see option [1]	6x240
	E	750	3GZF294730-944	-	3GZF294730-501		2x Ø60-80	4x240
450 LB	D, E	1200	see option [1]	-	see option [1]		see option [1]	6x240
450 LC	E, U	1200	see option [1]	-	see option [1]		see option [1]	6x240
1500 r/min (4 poles)								
280		210	3GZF294730-749	3GZF294730-749	2x 3GZF294730-613	**2x M63x1.5**	2x Ø32-49	2x150
315SM, ML		370	3GZF294730-753	3GZF294730-753	2x 3GZF294730-613	**2x M63x1.5**	2x Ø32-49	2x240
315LKA, LKB		370	3GZF294730-753	3GZF294730-753	2x 3GZF294730-613	**2x M63x1.5**	2x Ø32-49	2x240
315LKC		750	3GZF294730-944	3GZF294730-759	3GZF294730-301		2x Ø48-60	4x240
355 SMA	D	750	3GZF294730-944	3GZF294730-759	3GZF294730-301		2x Ø48-60	4x240
355 SMA	E	370	3GZF294730-753	3GZF294730-753	2x 3GZF294730-613	**2x M63x1.5**	2x Ø32-49	2x240
355 SMB, SMC		750	3GZF294730-944	3GZF294730-759	3GZF294730-301		2x Ø48-60	4x240
355 ML, LK		750	3GZF294730-944	3GZF294730-759	3GZF294730-501		2x Ø60-80	4x240
400 L, LK		750	3GZF294730-944	3GZF294730-759	3GZF294730-501		2x Ø60-80	4x240
450 LA	D	1200	see option [1]	-	see option [1]		see option [1]	6x240
	E	750	3GZF294730-944	-	3GZF294730-501		2x Ø60-80	4x240
450 LB	D, E	1200	see option [1]	-	see option [1]		see option [1]	6x240
450 LC	D, E	1200	see option [1]	-	see option [1]		see option [1]	6x240
1000 r/min (6 poles)								
280		210	3GZF294730-749	3GZF294730-749	2x 3GZF294730-613	**2x M63x1.5**	2x Ø32-49	2x150
315		370	3GZF294730-753	3GZF294730-753	2x 3GZF294730-613	**2x M63x1.5**	2x Ø32-49	2x240
355 SMA, SMB		370	3GZF294730-753	3GZF294730-753	2x 3GZF294730-613	**2x M63x1.5**	2x Ø32-49	2x240
355 SMC	D	750	3GZF294730-944	3GZF294730-759	3GZF294730-301		2x Ø48-60	4x240
355 SMC	E	370	3GZF294730-753	3GZF294730-753	2x 3GZF294730-613	**2x M63x1.5**	2x Ø32-49	2x240
355 ML		750	3GZF294730-944	3GZF294730-759	3GZF294730-301		2x Ø48-60	4x240
355 LKA		750	3GZF294730-944	3GZF294730-759	3GZF294730-301		2x Ø48-60	4x240
355 LKB		750	3GZF294730-944	3GZF294730-759	3GZF294730-501		2x Ø60-80	4x240
400 L, LK		750	3GZF294730-944	3GZF294730-759	3GZF294730-501		2x Ø60-80	4x240
450 LA	D, E	750	3GZF294730-944	-	3GZF294730-501		2x Ø60-80	4x240
450 LB	D	1200	see option [1]	-	see option [1]		see option [1]	6x240
	E	750	3GZF294730-944	-	3GZF294730-501		2x Ø60-80	4x240
450 LC	D	1200	see option [1]	-	see option [1]		see option [1]	6x240
	E	750	3GZF294730-944	-	3GZF294730-501		2x Ø60-80	4x240
750 r/min (8 poles)								
280		210	3GZF294730-749	3GZF294730-749	2x 3GZF294730-613	**2x M63x1.5**	2x Ø32-49	2x150
315		370	3GZF294730-753	3GZF294730-753	2x 3GZF294730-613	**2x M63x1.5**	2x Ø32-49	2x240
355 SM		370	3GZF294730-753	3GZF294730-753	2x 3GZF294730-613	**2x M63x1.5**	2x Ø32-49	2x240
355 ML	D	750	3GZF294730-944	3GZF294730-759	3GZF294730-301		2x Ø48-60	4x240
355 ML	E	370	3GZF294730-753	3GZF294730-753	2x 3GZF294730-613	**2x M63x1.5**	2x Ø32-49	2x240
355 LK		750	3GZF294730-944	3GZF294730-759	3GZF294730-301		2x Ø48-60	4x240
400 LA, LB, LKA, LKB		750	3GZF294730-944	3GZF294730-759	3GZF294730-301		2x Ø48-60	4x240
400 LC, LKC		750	3GZF294730-944	3GZF294730-759	3GZF294730-501		2x Ø60-80	4x240
450 L_	D, E	750	3GZF294730-944	-	3GZF294730-501		2x Ø60-80	4x240

Voltage/frequency codes:
D = 380-420 VΔ 50 Hz, 660/690 VY 50 Hz, 440-480 VΔ 60 Hz
E = 500 VΔ 50 Hz, 575 VΔ 60 Hz

Terminal bolt sizes M12.
Earthing bolt size on stator frame M10.

[1] Options - Variant code 444:

Terminal box	Adapter	Cable box or flange	Max. connection cable area mm²
1200	3GZF294730-944	3GZF294730-301	2x Ø48-60
	3GZF294730-944	3GZF294730-501	2x Ø60-80
	3GZF294730-945	2x 3GZF294730-301	4x Ø48-60
	3GZF294730-945	2x 3GZF294730-501	4x Ø60-80
	3GZF293745-1	3x 3GZF294730-301	6x Ø48-60
	3GZF293745-1	3x 3GZF294730-501	6x Ø60-80
	3GZF293745-2	Flange for gable glands	

Adapter and cable box for terminal box size 1200.
To be defined when ordering

Terminal box	Cable cross-section	Max. rated current D-connection	Y-connection	Earthing
210	25 mm²	260	150	2xM10
210	35 mm²	363	210	2xM10
370	50 mm²	470	270	2xM10
370	70 mm²	640	370	2xM10
750	2 x 70 mm²	950	550	2xM10
750	2 x 95 mm²	1300	750	2xM10
1200	2 x 120 mm²	1650	950	4xM12
1200	2 x 150 mm²	2100	1200	4xM12

Cable cross-section area between the winding and the terminal board.

M3BP 280 - 315

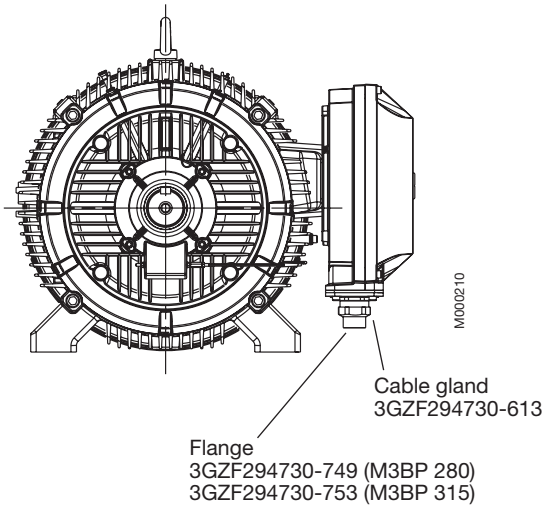

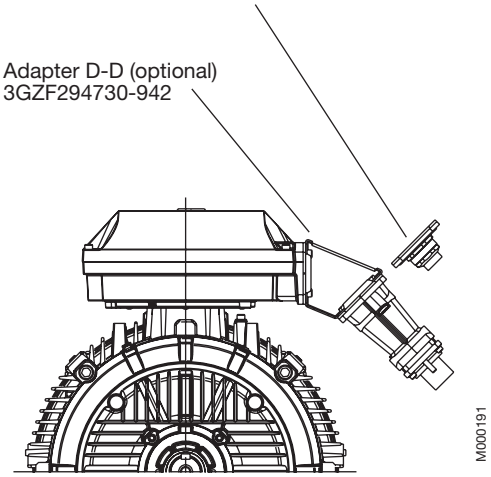

M3BP 355 - 400

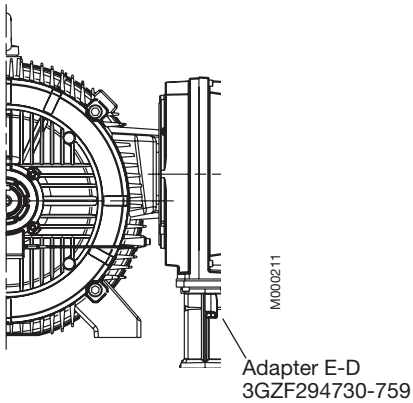

M3BP 355 - 450

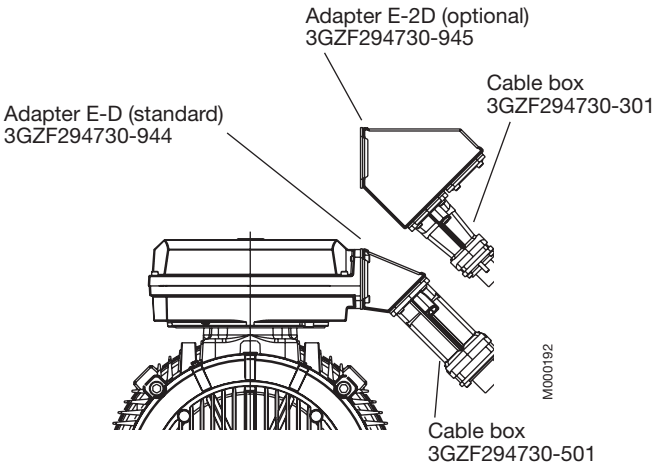

Auxiliary devices (view from N-end)

Cable glands for auxiliary devices
as standard 2 x M20 x 1.5.

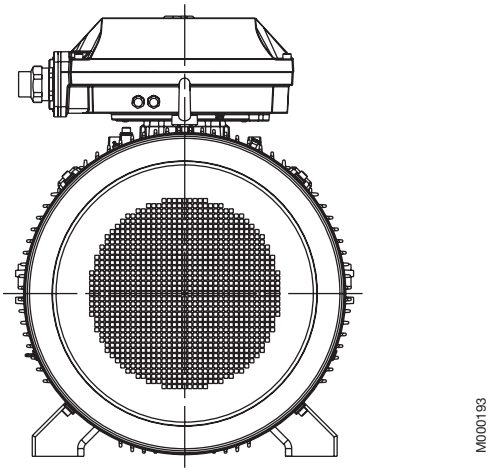

M3BP 450 with terminal box 1200

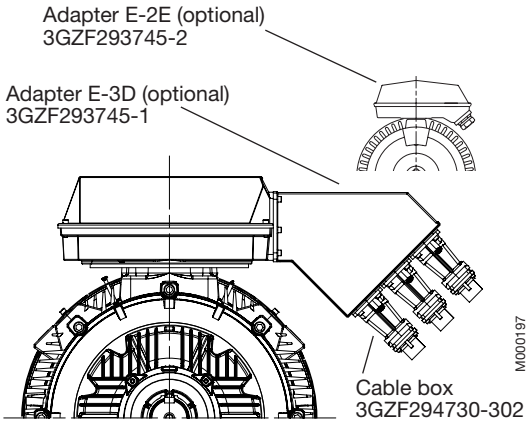

Dimensions for terminal box inlets

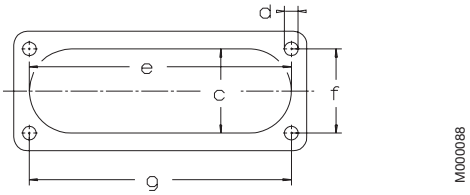

Inlet	c	e	f	g	d
C	62	193	62	193	M8
D	100	300	80	292	M10
E	115	370	100	360	M12

Terminal box

For motors M2QA 71 to 250 and M2BAT 280 to 355

Terminal boxes are mounted on top of the motor as standard. The motors can also be supplied with terminal box on right or left hand side.

The terminal box of motors M2QA 71 to 250 can be turned 4x90° and in motors M2BAT 280 to 355 rotated 2x180°, to allow cable entry from either side of the motor.

Degree of protection of standard terminal box is IP 55.

The terminal boxes in sizes 280 to 355 are equipped with cable glands or cable boxes as standard. Terminations are suitable for Cu- and Al-cables. Cables are connected to the terminals by cable lugs which are not included with the motor.

To enable the supply of suitable terminations for the motor, please state cable type, quantity and size when ordering. Non-standard design of terminal boxes; e.g. size, degree of protection, are available as options.

Please see variant codes for options.

4

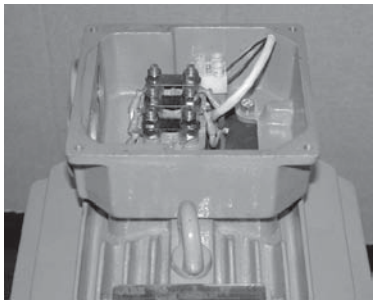

M000061

Terminal box for motors M2QA 71 to 132

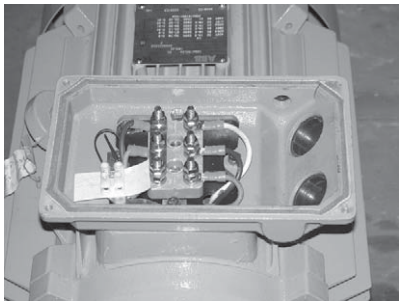

M000062

Terminal box for motors M2QA160 to 250

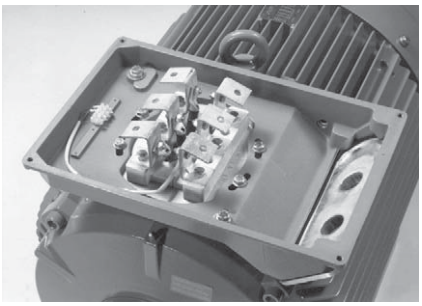

M000086

Terminal box for motors M2BAT 280 to 355, provided either with a cable gland or a cable box.

Terminal boxes and cable entries

If no ordering information of the cable is given, it is assumed to be p.v.c.-insulated and termination parts are supplied according to the table below.

In motors M2BAT 280 to 355 the terminal box is equipped with cable glands or cable boxes as standard.

To enable the supply of suitable terminations for the motor, please state cable type, quantity and size when ordering.

The table below shows the different alternatives available for cable boxes and cable entries. Other types on request.

M2QA 71 to 250 with top-mounted terminal box

Motor size	Poles	Cable entry mm
M2QA 71M	2,4,6,8	2xM16×1.5
M2QA 80M	2,4,6,8	2xM25×1.5
M2QA 90S	2,4,6,8	2xM25×1.5
M2QA 90L	2,4,6,8	2xM25×1.5
M2QA 100L	2,4,6,8	2xM32×1.5
M2QA 112M	2,4,6,8	2xM32×1.5
M2QA 132S	2,4,6,8	2xM32×1.5
M2QA 132M	2,4,6,8	2xM32×1.5

Motor size	Poles	Cable entry mm
M2QA 160M	2,4,6,8	2xM40×1.5
M2QA 160L	2,4,6,8	2xM40×1.5
M2QA 180M	2,4,6,8	2xM40×1.5
M2QA 180L	2,4,6,8	2xM40×1.5
M2QA 200L	2,4,6,8	2xM50×1.5
M2QA 225S	4,6,8	2xM50×1.5
M2QA 225M	2,4,6,8	2xM50×1.5
M2QA 250M	2,4,6,8	2xM63×1.5

Cable entries for thermistors: 1xM16x1.5 (type 160 to 250)

M2BAT 280 to 355 with top-mounted terminal box

Motor size	Terminal box	Flange opening	Flange	Cable gland	Cable entry	Cable diameter	Auxiliary entries	Terminal bolt
3000 r/min (2 poles)								
280 SM_	122/2	C	3GZF 294 730-749	3GZF 294 730-613	2 x M63	2 x Ø32-49	2 x M20	M8
315 SM_, ML_	142/1	D	3GZF 294 730-753	3GZF 294 730-613	2 x M63	3 x Ø32-49	2 x M20	M10
355 S	162/1	E-D	3GZF 294 730-753	3GZF 294 730-613	2 x M63	3 x Ø32-49	2 x M20	M12
1500 r/min (4 poles)								
280 SM_	122/2	C	3GZF 294 730-749	3GZF 294 730-613	2 x M63	2 x Ø32-49	2 x M20	M8
315 SM_, ML_	142/1	D	3GZF 294 730-753	3GZF 294 730-613	2 x M63	3 x Ø32-49	2 x M20	M10
355 S	162/1	E-D	3GZF 294 730-753	3GZF 294 730-613	2 x M63	3 x Ø32-49	2 x M20	M12
1000 r/min (6 poles)								
280 SM_	122/2	C	3GZF 294 730-749	3GZF 294 730-613	2 x M63	2 x Ø32-49	2 x M20	M8
315 SM_, ML_	142/1	D	3GZF 294 730-753	3GZF 294 730-613	2 x M63	3 x Ø32-49	2 x M20	M10
355 S	142/2	D	3GZF 294 730-753	3GZF 294 730-613	2 x M63	3 x Ø32-49	2 x M20	M10
750 r/min (8 poles)								
280 SM_	122/2	C	3GZF 294 730-749	3GZF 294 730-613	2 x M63	2 x Ø32-49	2 x M20	M8
315 SM_, ML_	142/1	D	3GZF 294 730-753	3GZF 294 730-613	2 x M63	3 x Ø32-49	2 x M20	M10
355 S	142/2	D	3GZF 294 730-753	3GZF 294 730-613	2 x M63	3 x Ø32-49	2 x M20	M10

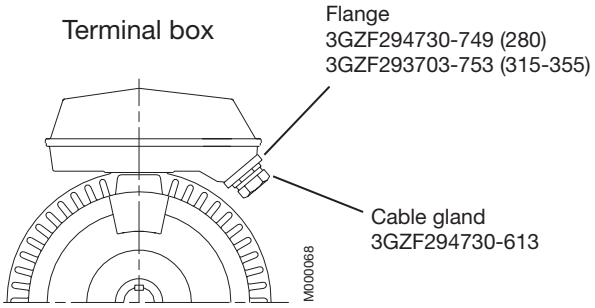

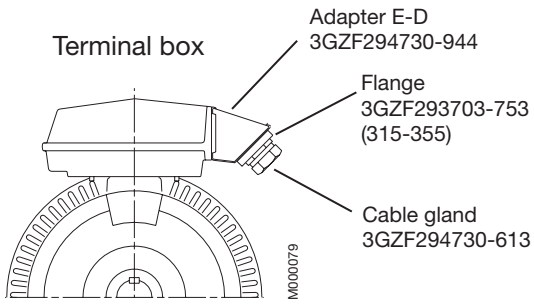

Alternatives for cable entries and cable boxes for M2BAT 280 to 355

Motor size	Terminal box on top	Terminal box on side	Opening type	Max. rated current A (D/Y-conn.)	Max connection cable area mm^2	Cable gland diameter	Auxliary cable entries	Cable box diameter	Blank plate
280	122/2	NA	C	363/210	2 x 150	2 x M40-63	2 x M20	max 2xØ60	MKLN 20
315	142/1	NA	D	640/370	2 x 240	1 x M40-63	2 x M20	max 2xØ60	MKLN 30
355	142/2		D	640/370	2 x 240	2 x M40-63	2 x M20	max 2xØ80	
	162/1		E-D	950/550	4 x 240			max 4xØ60	

Flange

Opening	Adapter 3GZF	c	e	f	g	d
C		62	193	62	193	M8
D		100	300	80	292	M10
E		115	370	100	360	M12
E-D	294730-944					

Dimensions for terminal box inlets

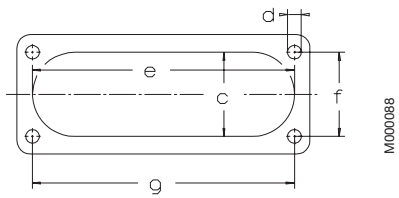

Bearings

The motors are normally fitted with single-row deep groove ball bearings as listed in the table below.

If the bearing at the D-end is replaced with a roller bearing (NU- or NJ-), higher radial forces can be handled. Roller bearings are suitable for belt drive applications.

When there are high axial forces, angular-contact ball bearings should be used. This option is available on request. When a motor with angular-contact ball bearings is ordered, the method of mounting and direction and magnitude of the axial force must be specified. For special bearings, please see the variant codes.

Motors M2BA 71 to 132 and M3BP 160 to 450

Basic version with deep groove ball bearings

Motor size	Number of poles	Deep groove ball bearings D-end	N-end
M2BA 71	2-6	6202 2RS C3	6202 2RS C3
M2BA 80	2-6	6204 2RS C3	6204 2RS C3
M2BA 90	2-6	6205 2RS C3	6205 2RS C3
M2BA 100	2-6	6206 2RS C3	6206 2RS C3
M2BA 112	2-6	6207 2RS C3	6206 2RS C3
M2BA 132	2-6	6208 2RS C3	6207 2RS C3
M3BP 160	2-12	6309/C3	6309/C3
M3BP 180	2-12	6310/C3	6309/C3
M3BP 200	2-12	6312/C3	6310/C3
M3BP 225	2-12	6313/C3	6312/C3
M3BP 250	2-12	6315/C3	6313/C3
M3BP 280	2	6316/C3	6316/C3
	4-12	6316/C3	6316/C3
M3BP 315	2	6316/C3	6316/C3
	4-12	6319/C3	6316/C3
M3BP 355	2	6316M/C3	6316M/C3
	4-12	6322/C3	6316/C3
M3BP 400	2	6317M/C3	6317M/C3
	4-12	6324/C3	6319/C3
M3BP 450	2	6317M/C3	6317M/C3
	4-12	6326/C3	6322/C3

Version with roller bearings, variant code 037

Motor size	Number of poles	Roller bearings. variant code 037 D-end
M2BA 71	2-6	–
M2BA 80	2-6	–
M2BA 90	2-6	–
M2BA 100	2-6	–
M2BA 112	2-6	–
M2BA 132	2-6	–
M3BP 160	2-12	NU 309 [1)]
M3BP 180	2-12	NU 310 [1)]
M3BP 200	2-12	NU 312 [1)]
M3BP 225	2-12	NU 313 [1)]
M3BP 250	2-12	NU 315 [1)]
M3BP 280	2	[1)]
	4-12	NU 316/C3 [1)]
M3BP 315	2	[1)]
	4-12	NU 319/C3 [1)]
M3BP 355	2	[1)]
	4-12	NU 322/C3 [1)]
M3BP 400	2	[1)]
	4-12	NU 324/C3 [1)]
M3BP 450	2	[1)]
	4-12	NU 326/C3

Motors M2QA 71 to 250 and M2BAT 160 to 355

Basic version with deep groove ball bearings

Motor size	Number of poles	Deep groove ball bearings D-end	N-end
M2QA 71	2-6	6202 2RS C3	6202 2RS C3
M2QA 80	2-6	6204 2RS C3	6204 2RS C3
M2QA 90	2-6	6205 2RS C3	6205 2RS C3
M2QA 100	2-8	6206 2RS C3	6206 2RS C3
M2QA 112	2-8	6207 2RS C3	6206 2RS C3
M2QA 132	2-8	6208 2RS C3	6207 2RS C3
M2QA 160	2-8	6309 2RS C3	6209 2RS C3
M2QA 180	2-8	6310 2RS C3	6210 2RS C3
M2QA 200	2-8	6312 2RS C3	6212 2RS C3

Motor size	Number of poles	Deep groove ball bearings D-end	N-end
M2QA 225S	4-8	6313 ZZ C3	6213 ZZ C3
M2QA 225M	2-8	6313 ZZ C3	6213 ZZ C3
M2QA 250M	2-8	6314/C3	6214/C3
M2BAT 280	2	6316/C4	6316/C4
	4-12	6316/C3	6316/C3
M2BAT 315	2	6316/C4	6316/C4
	4-12	6319/C3	6316/C3
M2BAT 355	2	6316M/C3	6316M/C3
	4-12	6322/C3	6319/C3

Axially-locked bearings

The outer bearing ring at the D-end can be axially locked with an inner bearing cover. The inner ring is locked by tight tolerance to the shaft.
All motors are equipped as standard with an axially-locked bearing at the D-end.

Motor size	D-end bearing locking
M2BA 71 - 132	D-end bearing locked with a spring ring
M3BP 160 - 450	D-end locked by the inner bearing cover
M2QA 71 - 180	D-end bearing locked with a spring ring
M2QA 200 - 250	D-end locked by the inner bearing cover
M2BAT 280 - 355	D-end locked by the inner bearing cover

Transport locking

Motors that have roller bearings or an angular contact ball bearing are fitted with a transport lock before despatch to prevent damage to the bearings during transport. In case of transport locked bearing, motors M3BP 280 to 450 and M2BAT 355 are provided with a warning sign.

Locking may also be fitted in other cases where transport conditions are suspected of being potentially damaging.

Bearing seals

Motors M2BA 71 to 132 are equipped with sealed bearings (2RS).

Bearing seals for M3BP motors

Motor size	Number of poles	Standard design Axial seal D-end	N-end	Alternative design Radial seal (DIN 3760) Variant code 072
M3BP 160	2-12	RB45	V-45A	45x62x8
M3BP 180	2-12	RB50	RB45	50x68x8
M3BP 200	2-12	RB60	V-50A	60x80x8
M3BP 225	2-12	RB65	V-60A	65x85x10
M3BP 250	2-12	RB75	V-65A	75x95x10

Axial seal:
RB45...75 = Gamma-ring
V50...95 = V-ring

4

Motor size	Number of poles	Standard design D-end	N-end	Alternative desig D-end	N-end
M3BP 280	2	Labyrinth seal	Axial seal VS80	-	Labyrinth seal
M3BP 280	4-12	Axial seal VS80	Axial seal VS80	Labyrinth seal Radial seal 80x110x10	Labyrinth seal Radial seal 80x110x10
M3BP 315	2	Labyrinth seal	Axial seal VS80	-	Labyrinth seal
M3BP 315	4-12	Axial seal VS95	Axial seal VS80	Labyrinth seal Radial seal 95x125x10	Labyrinth seal Radial seal 80x110x10
M3BP 355	2	Labyrinth seal	Axial seal VS80	-	Labyrinth seal
M3BP 355	4-12	Labyrinth seal	Axial seal VS80	-	Labyrinth seal
M3BP 400	2	Labyrinth seal	Labyrinth seal	-	-
M3BP 400	4-12	Labyrinth seal	Axial seal VS95	-	Labyrinth seal
M3BP 450	2	Labyrinth seal	Labyrinth seal	-	-
M3BP 450	4-12	Labyrinth seal	Labyrinth seal	-	-

M2BA 71 to 132

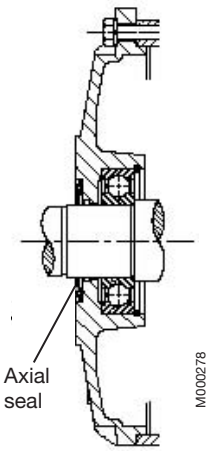

M3BP 160 to 250

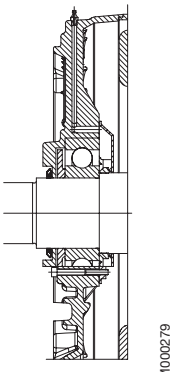

M3BP 280 to 450

Labyrith seal

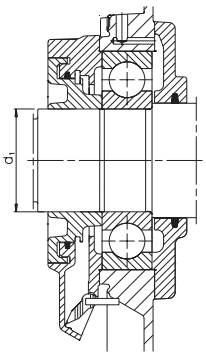

V-ring

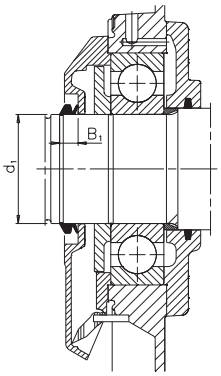

Radial seal

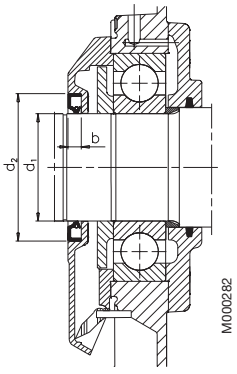

Bearing seals for M2QA and M2BAT motors

Motor size	Description D-end	Standard design Axial seal N-end		Alternative design Radial seal (DIN 3760) Variant code 072	Number of poles	d_1	d_2	B_1	b
M2QA 71 to 132	Sealed bearings (2RS) and axial seal, gamma ring, at D-end								
M2QA 160 to 225	Axial seal, gamma ring, at D-end								
M2QA 250	Radial seal at D-end								
M2BAT 280	Axial seals at both ends	VS 80	VS 80	80x100x10[1)]	2	80	100	13.5	10
		VS 80	VS 80	80x100x10	4-12	80	100	13.5	10
M2BAT 315	Axial seals at both ends	VS 80	VS 80	80x100x10[1)]	2	80	100	13.5	10
		VS 95	VS 80	95x120x12	4-12	95	120	13.5	12
M2BAT 355	Axial seals at both ends	VS 80	VS 80	90x100x10[1)]	2	80	100	13.5	10
		VS 110	VS 95	110x140x12[1)]	4-12	110	140	15.5	12

[1)] Viton-seal

4

Motors M2QA 71-132

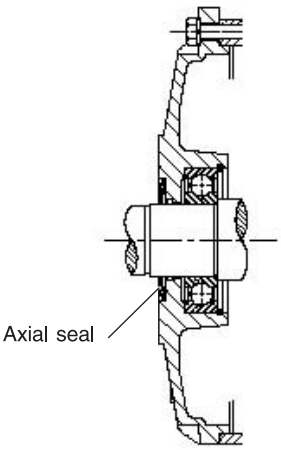

Motors M2QA 160 to 225

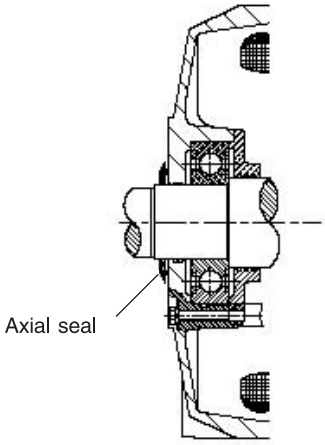

Motors M2QA 250

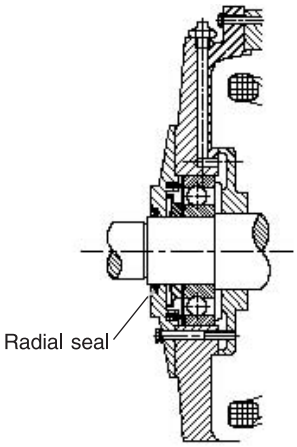

Motors M2BAT 280 to 355

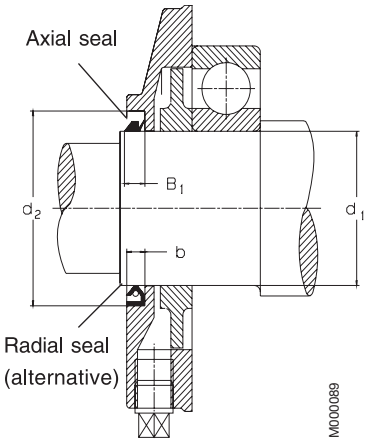

Bearing life

The nominal life L_{10} of a bearing is defined according to ISO 281 as the number of operating hours achieved or exceeded by 90% of identical bearings in a large test series under certain specified conditions, 50% of the bearings achieve at least five times this figure.

The calculated bearing life L_{10} for power transmission by means of a coupling (horizontal machine):

Motor sizes 280 to 450 ≥ 200,000 hours.

Lubrication

On delivery, the motors are ready lubricated with high quality grease. The recommended grease used can be seen from ABB's Low Voltage Motors Manual delivered together with the motor or for motors M3BP 280 to 400 and M2BAT 355 from the lubrication plate fastened to the motor frame. See example of a lubrication plate, chapter Rating plates.

Motors with permanently greased bearings

Standard versions of motors M2BA 71 to 132 are equipped with sealed bearings, type 2RS. Motors M3BP 160 to 250 can be equipped with permanently greased bearings. Standard versions of motors M2QA 71 to 132 are equipped with sealed bearings, and frame sizes 160 to 225 with bearing type ZZ.

Bearings are lubricated with high quality, high temperature grease. Bearing types are mentioned in the rating plates. The following values can be used as a guide for bearing lifetime, depending on application and load conditions:

4-8 pole motors about 40,000 h
2 pole motors about 20,000

Lubrication method in motors M2BA 71 to 132 and M3BP 160 to 450

M2BA 71 to 132	Permanent greased bearings as standard
M3BP 160 to 450	Regreasable bearings as standard solution
M3BP 160 to 250	Permanent greased bearings as an option

Motors with relubrication nipples

Motors M3BP 280 to 450 are provided with a valve disc, which makes lubrication possible when the motors is running.

Grease outlet opening, in motors M3BP 280 to 450, has closing valves at both ends. This should be opened before greasing and closed 1-2 hours after regreasing. After lubrication close the valves. This ensures that the construction is tight and dust or dirt cannot get inside the bearing.

As an option, a grease collection method can be used.

Lubrication method in motors M2QA 71 to 250 and M2BAT 280 to 355

M2QA 71 to 225	Permanent greased bearings as standard
M2QA 250 M2BAT 280 to 355	Regreasable bearings as standard solution
M2QA 160 to 225	Regreasable bearings as an option

Motors M2QA 250 and M3BAT 280 to 355 have grease value lubrication for lubrication in service. The lubrication intervals and quantity are stated in the maintenance manual which comes with the motor.

Lubrication intervals

ABB follows the L_1-principle in defining lubrication interval. That means that 99% of the motors are sure to make the interval time. The lubrication intervals can also be calculated according to the L_{10}-principle, which are normally doubled compared to L_1-values. Values available from ABB at request.

Frame size	Amount of grease g	3600 r/min	3000 r/min	1800 r/min	1500 r/min	1000 r/min	500-750 r/min
Ball bearings:		lubrication intervals in duty hours					
112	10	10000	13000	18000	21000	25000	28000
132	15	9000	11000	17000	19000	23000	26500
160	25	7000	9500	14000	17000	21000	24000
180	30	6000	8000	13500	16000	20000	23000
200	40	4000	6000	11000	13000	17000	21000
225	50	3000	5000	10000	12500	16500	20000
250	60	2500	4000	9000	11500	15000	18000
280	35	2000	3500	-	-	-	-
280	70	-	-	8000	10500	14000	17000
315	35	2000	3500	-	-	-	-
315	90	-	-	6500	8500	12500	16000
355	35	1200	2000	-	-	-	-
355	120	-	-	4200	6000	10000	13000
400	40	1000	1600	-	-	-	-
400	130	-	-	2800	4600	8400	12000
450	40	1000	1600	-	-	-	-
450	140	-	-	2400	4000	8000	8800

The table below gives lubrication intervals according to the L_1-principle for different speeds. The values are valid for horizontal mounted motors (B3), with about 80°C bearing temperature and using high quality grease with lithium complex soap and with mineral or PAO-oil.

For more information. see ABB's Low Voltage Motors Manual.

Frame size	Amount of grease g	3600 r/min	3000 r/min	1800 r/min	1500 r/min	1000 r/min	500-750 r/min
Roller bearings:		lubrication intervals in duty hours					
160	25	3500	4500	7000	8500	10500	12000
180	30	3000	4000	7000	8000	10000	11500
200	40	2000	3000	5500	6500	8500	10500
225	50	1500	2500	5000	6000	8000	10000
250	60	1300	2200	4500	5700	7500	9000
280	35	1000	1800	-	-	-	-
280	70	-	-	4000	5300	7000	8500
315	35	1000	1800	-	-	-	-
315	90	-	-	3300	4300	6000	8000
355	35	600	1000	-	-	-	-
355	120	-	-	2000	3000	5000	6500
400	40	500	800	-	-	-	-
400	130	-	-	1400	2300	4200	6000
450	40	500	800	-	-	-	-
450	140	-	-	1200	2000	4000	4400

Pulley diameter

When the desired bearing life has been determined, the minimum permissible pulley diameter can be calculated using FR, as follows:

$$D = \frac{1.9 \cdot 10^7 \cdot K \cdot P}{n \cdot F_R}$$

where:

D = diameter of pulley, mm
P = power requirement, kW
n = motor speed, r/min
K = belt tension factor, dependent on belt type and type of duty. A common value for V-belts is 2.5.
F_R = permissible radial force

Permissible loadings on shaft

The tables give the permissible radial force in Newtons, assuming zero axial force. The values are based on normal conditions at 50 Hz and calculated bearing lives for motor sizes 71 to 132 of 20000 hours and for motor sizes 160 to 450 of 20,000 and 40,000 hours.

Motors are foot-mounted IM B3 version with force directed sideways. In some cases the strength of the shaft affects the permissible forces.

At 60 Hz the values must be reduced by 10 %. For two-speed motors, the values must be based on the higher speed.
Permissible loads of simultaneous radial and axial forces will be supplied on request.

If the radial force is applied between points X_0 and X_{max}, the permissible force F_R can be calculated from the following formula:

$$F_R = F_{X0} - \frac{X}{E}(F_{X0} - F_{Xmax})$$

E = length of shaft extension in basic version

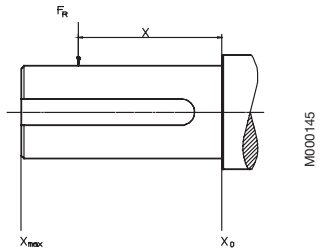

Permissible radial forces

Motors M2BA 71 to 132

Motor size	Poles	Length of shaft extension E (mm)	Radial forces Ball bearings 20,000 hours FX_0(N)	FX_{max}(N)	40,000 FX_0(N)	FX_{max}(N)
M2BA 71 M	2	30	381	322	303	256
	4	30	480	405	381	322
	6	30	555	469	441	372
M2BA 80 M	2	40	624	509	495	404
	4	40	788	643	626	511
	6	40	907	740	720	587
	8	40	997	813	791	646
M2BA 90 S	2	40	686	542	545	430
	4	40	870	687	690	545
	6	40	1000	790	794	627
	8	40	1095	866	870	687
M2BA 90 L	2	50	696	564	553	448
	4	50	885	717	702	569
	6	50	1015	823	806	653
	8	50	1112	901	883	715
M2BA 100 L	2	60	979	785	777	622
	4	60	1234	989	979	785
	6	60	1419	1137	1126	903
	8	60	1566	1255	1243	996
M2BA 112 M	2	60	1258	1014	998	805
	4	60	1592	1284	1264	1019
	6	60	1831	1477	1453	1172
	8	60	2020	1629	1603	1293
M2BA 132 S	2	80	1435	1122	1139	890
	4	80	1821	1423	1445	1130
	6	80	2079	1625	1650	1290
	8	80	2299	1797	1825	1427
M2BA 132 M	4	80	1840	1476	1461	1172
	6	80	2107	1690	1672	1341
	8	80	2329	1869	1849	1483

Permissible radial forces

Motors M3BP 160 to 400

Motor size	Poles	Length of shaft extension E (mm)	Ball bearings 20,000 hours FX_0 (N)	Ball bearings 20,000 hours FX_{max}(N)	Ball bearings 40,000 hours FX_0 (N)	Ball bearings 40,000 hours $FX_{max(}$N)	Roller bearings 20,000 hours FX_0 (N)	Roller bearings 20,000 hours FX_{max}(N)	Roller bearings 40,000 hours FX_0 (N)	Roller bearings 40,000 hours FX_{max}(N)
M3BP 160	2	110	2980	2310	2350	1810	5530	4260	4370	3360
	4	110	3760	2900	2970	2290	6980	5380	5520	4250
	6	110	4290	3300	3390	2750	7980	6150	6310	4860
	8	110	4730	3660	3740	2880	8800	6780	6960	5360
M3BP 180	2	110	3540	2880	2790	2260	6260	5080	4940	4010
	4	110	4390	3560	3440	2790	7830	6350	6160	5000
	6	110	5060	4110	3970	3220	9000	7300	7100	5750
	8	110	5590	4540	4390	3560	9940	8060	7830	6350
M3BP 200 ML_	2	110	4510	3700	3530	2900	8520	7000	6710	5510
	4	110	5660	4650	4430	3640	10710	8800	8440	6930
	6	110	6470	5310	5050	4150	12250	10060	9640	7920
	8	110	7160	5880	5600	5880	13520	11100	10650	8750
M3BP 225 SM_	2	110	4750	4010	3710	3130	9720	8200	7650	6450
	4	140	6310	5040	4920	3840	12900	10310	10150	8120
	6	140	7200	5760	5620	4500	14740	11800	11600	9280
	8	140	7970	6375	6230	4980	16270	13010	12820	10250
M3BP 250 SM_	2	140	6100	4910	4750	3830	13600	10960	10710	8640
	4	140	7650	6170	5960	5450	17100	13800	13470	10870
	6	140	8700	7010	6760	5450	19520	15740	15360	12400
	8	140	9630	7760	7505	6050	21550	17380	16970	13690
M3BP 280 SM_	2	140	7300	6000	5800	4900	20400	6000	16500	6000
	4	140	9200	7800	7300	6200	25100	9200	20300	9200
	6	140	10600	8900	8400	7000	28300	9200	23000	9200
	8	140	11700	9200	9200	7800	30900	9200	25100	9200
M3BP 315 SM_	2	140	7300	6000	5800	4950	20300	6000	16500	6000
	4	170	11400	9400	9000	7450	32500	9600	26600	9600
	6	170	13000	9600	10300	8500	37000	9600	30000	9600
	8	170	14400	9600	11400	9400	40300	9600	32700	9600
M3BP 315 ML_	2	140	7400	6400	5850	5050	20600	5850	16700	5850
	4	170	11500	9700	9100	7650	32700	13600	26500	13600
	6	170	13200	11100	10400	8800	36900	13600	29900	13600
	8	170	14500	12200	11500	9700	40200	13600	32600	13600
M3BP 315 LK_	2	140	7400	6550	5800	5150	20800	5550	16800	5550
	4	170	11500	10000	9100	7850	33100	13350	26800	13350
	6	170	13200	11400	10450	9050	37300	13350	30300	13350
	8	170	14600	12600	11550	10000	40800	13350	33100	13350
M3BP 355 SM_	2	140	7350	6450	5750	5050	20600	7200	16700	7200
	4	210	15200	12600	12000	9950	45500	14000	36900	14000
	6	210	17500	14000	13800	11400	51400	14000	41700	14000
	8	210	19300	14000	15250	12600	56000	14000	45500	14000
M3BP 355 ML_	2	140	7350	6550	5750	5100	20800	6750	16800	6750
	4	210	15300	12900	12000	10100	45900	13600	37200	13600
	6	210	17600	13600	13900	11600	51500	13600	42100	13600
	8	210	19400	13600	15300	12900	56000	13600	45900	13600
M3BP 355 LK_	2	140	7350	6650	5650	5150	21000	6750	17000	6750
	4	210	15200	13000	11850	10200	46000	13000	37300	13000
	6	210	17500	13000	13700	11900	52000	13000	42000	13000
	8	210	19400	13000	15200	13000	56500	13000	46000	13000
M3BP 400 L_	2	170	7650	6850	4400	3900	23900	9050	19350	9050
	4	210	15600	13550	12150	10550	52500	16000	43300	16000
	6	210	17800	15450	13850	12000	60000	16000	48800	16000
	8	210	19700	16000	15350	13350	65700	16000	53200	16000
M3BP 400 LK_	2	170	7650	6850	4400	3900	23900	9050	19350	9050
	4	210	15600	11500	12150	10550	52500	11500	43300	11500
	6	210	17800	11500	13850	11500	60000	11500	48800	11500
	8	210	19700	11500	15350	11500	65700	11500	53200	11500
M3BP 450 L_	2	170	7400	6700	3500	3300	24000	7500	19000	7500
	4	210	17000	15200	13000	11600	62000	25000	50000	25000
	6	210	1900	17000	14000	13000	70000	24000	56000	24000
	8	210	21300	19000	16500	14600	76000	23000	62000	23000

Permissible radial forces

Motors M2QA 71 to 180

Motor size	No of Poles	Length of shaft extension E (mm)	Radial forces Ball bearings 20,000 hours FX_0(N)	FX_{max}(N)	40,000 FX_0(N)	FX_{max}(N)
M2QA 71 M	2	30	381	322	303	256
	4	30	480	405	381	322
	6	30	555	469	441	372
M2QA 80 M	2	40	624	509	495	404
	4	40	788	643	626	511
	6	40	907	740	720	587
	8	40	997	813	791	646
M2QA 90 S	2	40	686	542	545	430
	4	40	870	687	690	545
	6	40	1000	790	794	627
	8	40	1095	866	870	687
M2QA 90 L	2	50	696	564	553	448
	4	50	885	717	702	569
	6	50	1015	823	806	653
	8	50	1112	901	883	715
M2QA 100 L	2	60	979	785	777	622
	4	60	1234	989	979	785
	6	60	1419	1137	1126	903
	8	60	1566	1255	1243	996
M2QA 112 M	2	60	1258	1014	998	805
	4	60	1592	1284	1264	1019
	6	60	1831	1477	1453	1172
	8	60	2020	1629	1603	1293
M2QA 132 S	2	80	1435	1122	1139	890
	4	80	1821	1423	1445	1130
	6	80	2079	1625	1650	1290
	8	80	2299	1797	1825	1427
M2QA 132 M	4	80	1840	1476	1461	1172
	6	80	2107	1690	1672	1341
	8	80	2329	1869	1849	1483
M2QA 160 M	2	110	1544	1200	1226	952
	4	110	1948	1513	1546	1201
	6	110	2232	1734	1772	1377
	8	110	2465	1916	1957	1520
M2QA 160L	2	110	1563	1243	1240	987
	4	110	1971	1568	1565	1244
	6	110	2259	1797	1793	1426
	8	110	2495	1984	1980	1575
M2QA 180M	2	110	2984	2371	2368	1882
	4	110	3759	2988	2984	2371
M2QA 180L	4	110	3802	3073	3017	2439
	6	110	4352	3518	3454	2792
	8	110	4800	3881	3810	3080

Permissible radial forces

Motors M2QA 200 to 250 and M2BAT 280 to 355

Motor size	No of Poles	Length of shaft extension E (mm)	Radial forces Ball bearings 20,000 hours FX_0(N)	FX_{max}(N)	40,000 FX_0(N)	FX_{max}(N)
M2QA 200L	2	110	4090	3377	3246	2680
	4	110	5162	4262	4097	3383
	6	110	5909	4879	4690	3872
	8	110	6518	5382	5173	4272
M2QA 225S	4	140	5763	4526	4574	4593
	8	140	7261	5703	5763	4526
M2QA 225M	2	110	4591	3811	3644	3025
	4	110	5791	4594	4596	3646
	6	110	6644	5271	5273	4184
	8	110	7296	5788	5791	4594
M2QA 250M	2	140	5112	4170	4057	3310
	4	140	6440	5254	5111	4170
	6	140	7388	6027	5864	4784
	8	140	8113	6619	6439	5253
M2BAT 280SM_	2	140	7300	6000	5800	4900
	4	140	9200	7800	7300	6200
	6	140	10600	8900	8400	7000
	8	140	11700	9200	9200	7800
M2BAT 315SM_	2	140	7300	6000	5800	4950
	4	170	11400	9400	9000	7450
	6	170	13000	9600	10300	8500
	8	170	14400	9600	11400	9400
M2BAT 315ML	2	140	7400	6400	5850	5050
	4	170	11500	9700	9100	7650
	6	170	13200	11100	10400	8800
	8	170	14500	12200	11500	9700
M2BAT 355 S_	2	140	9000	7900	6200	5300
	4	210	15200	12600	12000	9950
	6	210	17500	14000	13800	11400
	8	210	19300	14000	15250	12600

Permissible axial forces

The following tables give the permissible axial forces in Newton, assuming zero radial force. The values are based on normal conditions at 50 Hz with standard bearings and calculated bearing lives of 20,000 and 40,000 hours.

At 60 Hz the values are to be reduced by 10%.
For two-speed motors, the values are to be based on the higher speed. The permissible loads of simultaneous radial and axial forces will be supplied on request.
Given axial forces F_{AD}, assumes D-bearing locked by means of locking ring.

M2BA 71 to 132 and M3BP 160 to 450

Mounting arrangement IM B3

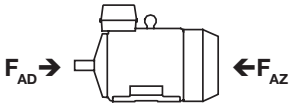

Motor size	20,000 hours 2-pole F_{AD} N	2-pole F_{AZ} N	4-pole F_{AD} N	4-pole F_{AZ} N	6-pole F_{AD} N	6-pole F_{AZ} N	8-pole F_{AD} N	8-pole F_{AZ} N	40,000 hours 2-pole F_{AD} N	2-pole F_{AZ} N	4-pole F_{AD} N	4-pole F_{AZ} N	6-pole F_{AD} N	6-pole F_{AZ} N	8-pole F_{AD} N	8-pole F_{AZ} N
71	270	270	350	350	440	440	-	-	1)	1)	1)	1)	1)	1)	-	-
80	400	400	510	510	590	590	-	-	1)	1)	1)	1)	1)	1)	-	-
90	450	450	560	560	640	640	-	-	1)	1)	1)	1)	1)	1)	-	-
100	620	620	780	780	890	890	-	-	1)	1)	1)	1)	1)	1)	-	-
112	810	810	1020	1020	1170	1170	-	-	1)	1)	1)	1)	1)	1)	-	-
132 S_	980	980	1220	1220	1400	1400	-	-	1)	1)	1)	1)	1)	1)	-	-
132 M_	980	980	1210	1210	1400	1400	-	-	1)	1)	1)	1)	1)	1)	-	-
160	5240	5240	5230	5230	5220	5220	5240	5240	4650	4650	4630	4630	4630	4630	4740	4740
180	4660	4660	4950	4950	5200	5200	5370	5370	4250	4250	4500	4500	4710	4710	4850	4850
200	3050	3050	3850	3850	4400	4400	4850	4850	2430	2430	3050	3050	3500	3500	3850	3850
225	3440	3440	4340	4340	4960	4960	5460	5460	2730	2730	3440	3440	3940	3940	4340	4340
250	4180	4180	5260	5260	6020	6020	6630	6630	3320	3320	4180	4180	4780	4780	5260	5260
280 SM_	6200	4250	8000	6000	7250	9250	10300	8300	4900	2900	6250	4250	7150	5150	7950	5950
315 SM_	6180	4200	9400	7400	10900	8900	12000	10000	4850	2850	7250	5250	8350	6350	9200	7000
315 ML_	6050	4050	9250	7250	10650	8650	11500	9900	4750	2750	7100	5100	8100	6100	8900	6800
315 LK_	6000	3950	9100	7150	10500	8500	11750	9750	4650	2650	7000	5000	7950	5950	8900	6900
355 SM_	3050	6850	8600	12400	10550	14350	12200	16000	1750	5550	5900	9700	7300	11100	8550	12350
355 ML_	2900	6700	8360	12150	10100	13900	12000	15800	1600	5400	5650	9450	6900	10700	7300	11000
355 LK_	2850	6650	8200	12000	9900	13700	11450	15250	1550	5350	5450	9250	6700	10500	7800	11600
400 L, LK_	2150	7150	7100	13100	8850	14850	10450	16450	1)	5800	4300	10300	5500	11500	6750	12750
450 L_	1800	6800	7600	13500	9000	15000	10800	16800	1)	5500	4500	10500	5600	11500	7000	12900

M2BA 71 to 132 and M3BP 160 to 450

Mounting arrangement IM V1

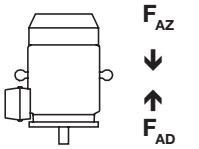

Motor size	20,000 hours 2-pole F_{AD} N	2-pole F_{AZ} N	4-pole F_{AD} N	4-pole F_{AZ} N	6-pole F_{AD} N	6-pole F_{AZ} N	8-pole F_{AD} N	8-pole F_{AZ} N	40,000 hours 2-pole F_{AD} N	2-pole F_{AZ} N	4-pole F_{AD} N	4-pole F_{AZ} N	6-pole F_{AD} N	6-pole F_{AZ} N	8-pole F_{AD} N	8-pole F_{AZ} N
71	290	260	380	330	460	420	-	-	1)	1)	1)	1)	1)	1)	-	-
80	430	390	540	490	620	560	-	-	1)	1)	1)	1)	1)	1)	-	-
90	480	420	610	520	700	600	-	-	1)	1)	1)	1)	1)	1)	-	-
100	680	580	880	740	990	840	-	-	1)	1)	1)	1)	1)	1)	-	-
112	890	760	1140	950	1280	1100	-	-	1)	1)	1)	1)	1)	1)	-	-
132 S_	1100	910	1390	1120	1580	1300	-	-	1)	1)	1)	1)	1)	1)	-	-
132 M_	1100	910	1430	1080	1680	1260	-	-	1)	1)	1)	1)	1)	1)	-	-
160	5540	4940	5560	4960	5540	4900	5540	4900	4940	4370	4950	4290	5180	4310	5180	4310
180	5040	4320	5470	4500	5810	4630	5970	4810	4630	3920	4990	4050	5320	4140	5450	4280
200	3600	2500	4580	3120	5280	3530	5720	3980	2970	1870	3780	2320	4370	2620	4720	2980
225	4140	2740	5230	3440	6030	3900	6530	4400	3430	2030	4330	2550	5010	2870	5400	3270
250	5020	3330	6380	4150	7440	4610	8050	5210	4160	2470	5290	3060	6200	3360	6680	3840
280 SM_	7550	3150	9600	4550	11150	5500	12200	7000	6200	1800	7800	2750	9000	3350	9850	4700
315 SM_	7950	2600	11750	5500	13600	6300	15350	7900	6600	1300	9550	3300	11050	3750	12450	5000
315 ML_	8650	2300	12500	5050	14900	5800	15400	6300	7300	1)	10300	2900	12350	3250	13600	3400
315 LK_	9100	1350	13100	3850	15700	4100	16900	6300	7750	1)	10900	1700	13100	1550	14100	3450
355 SM_	6350	4250	13250	8600	15650	9580	17350	12500	4950	2900	10450	5850	12350	6270	13600	8900
355 ML_	7100	3700	14600	7950	18050	8600	21100	11650	5750	2350	11850	5150	14700	5300	17000	7600
355 LK_	7500	3150	15650	6600	19100	7050	21200	8700	6150	1800	12850	3800	15800	3750	17500	5000
400 L, LK_	8650	2150	16050	6400	18450	6750	20100	8350	7220	1)	13150	3400	15100	3400	16450	4700
450 L_	11500	1)	20000	4400	26000	3700	27800	5500	10000	1)	17700	1200	22200	1)	23700	1350

1) On request

M2QA 71 to 250 and M2BAT 280 to 355

Mounting arrangement IM B3

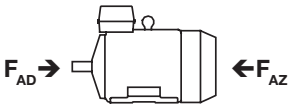

Motor size	20,000 hours								40,000 hours							
	2-pole		4-pole		6-pole		8-pole		2-pole		4-pole		6-pole		8-pole	
	F_{AD} N	F_{AZ} N	F_{AD} N	F_{AZ} N	F_{AD} N	F_{AZ} N	F_{AD} N	F_{AZ} N	F_{AD} N	F_{AZ} N	F_{AD} N	F_{AZ} N	F_{AD} N	F_{AZ} N	F_{AD} N	F_{AZ} N
71	270	270	360	360	440	440	-	-	200	200	270	270	320	320	-	-
80	430	430	590	590	710	710	800	800	320	320	440	440	530	530	600	600
90	470	470	650	650	780	780	870	870	350	350	470	470	580	580	650	650
100	650	650	880	880	1060	1060	1200	1200	480	480	650	650	780	780	890	890
112	840	840	1160	1160	1380	1380	1570	1570	620	620	850	850	1020	1020	1170	1170
132 S_	950	950	1300	1300	1540	1540	1760	1760	690	690	960	960	1140	1140	1310	1310
132 M_	-	-	1300	1300	1540	1540	1760	1760	-	-	950	950	1140	1140	1310	1310
160	1020	1020	1380	1380	1650	1650	1880	1880	740	740	1020	1020	1210	1210	1390	1390
180M	1970	1970	2660	2660	-	-	-	-	1440	1440	1970	1970	-	-	-	-
180L	-	-	2660	2660	3200	3200	3620	3620	-	-	1970	1970	2350	2350	2670	2670
200	2570	2570	3490	3490	4200	4200	4750	4750	1890	1890	2580	2580	3080	3080	3500	3500
225S	-	-	3900	3900	-	-	5310	5310	-	-	2880	2880	-	-	3900	3900
225M	2870	2870	3900	3900	4720	4720	5310	5310	2120	2120	2880	2880	3460	3460	3900	3900
250	3220	3220	4380	4380	5290	5290	5960	5960	2380	2380	3220	3220	3880	3880	4380	4380
280	7300	5300	8000	6000	9000	7000	10000	8000	5750	3750	6200	4200	6900	4900	7700	5700
315	7000	5000	9000	7000	10600	8600	11600	9600	5600	3600	6900	4900	7900	5900	8900	6900
355	6900	2900	13500	6500	15300	8300	16800	9800	5600	1600	10800	3800	12000	5000	13300	6300

M2QA 71 to 250 and M2BAT 280 to 355

Mounting arrangement IM V1

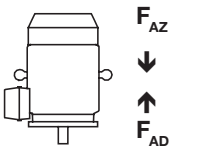

Motor size	20,000 hours								40,000 hours							
	2-pole		4-pole		6-pole		8-pole		2-pole		4-pole		6-pole		8-pole	
	F_{AD} N	F_{AZ} N	F_{AD} N	F_{AZ} N	F_{AD} N	F_{AZ} N	F_{AD} N	F_{AZ} N	F_{AD} N	F_{AZ} N	F_{AD} N	F_{AZ} N	F_{AD} N	F_{AZ} N	F_{AD} N	F_{AZ} N
71	280	260	380	350	450	420	-	-	210	190	280	250	340	310	-	-
80	450	410	620	560	740	560	830	770	340	300	460	410	550	500	620	560
90	500	440	590	600	820	730	920	830	380	320	510	440	620	530	690	600
100	710	590	950	800	1140	980	1280	1110	530	420	720	560	860	700	970	800
112	920	770	1260	1050	1490	1270	1680	1470	690	540	950	740	1130	910	1270	1060
132 S_	1050	830	1450	1160	1690	1400	1930	1600	800	570	1100	810	1280	990	1470	1140
132 M_	-	-	1480	1120	1730	1320	1950	1580	-	-	1130	770	1320	910	1490	1120
160 M_	1240	750	1670	1100	1960	1340	2140	1560	970	480	1300	730	1530	900	1650	1070
160 L_	1320	710	1730	1030	2050	1250	2260	1500	1050	440	1370	670	1610	820	1770	1010
180 M_	2320	1630	3100	2230	-	-	-	-	1780	1100	2400	1540	-	-	-	-
180 L_	-	-	3170	2150	3750	2650	4160	3100	-	-	2480	1460	2900	1800	3200	2140
200	3050	2050	4100	2880	4830	3510	5450	4060	2370	1370	3180	1970	3700	2390	4200	2800
225 S_	-	-	4680	3130	-	-	6120	4500	-	-	3650	2100	-	-	4720	3090
225 M_	3570	2180	4770	3040	5650	3790	6250	4370	2810	1420	3740	2020	4390	2530	4850	2960
250	4090	2360	5570	3180	6520	4070	7210	4700	3240	1520	4420	2030	5100	2650	5630	3120
280	8500	4300	9500	4600	11000	5500	12200	6600	6950	2700	7700	2800	8900	3350	9750	4200
315 SM_	9000	3700	11600	5400	13500	6200	14500	7500	7450	2100	9450	3200	10900	3650	11900	4650
315 ML_	9600	3400	12400	5000	14800	5600	16200	7000	8100	1850	10100	2850	12200	3150	13200	4150
355 S_	10000 [1]		18500	3800	21200	5000	23000	6800	88000 [1]		15700	1000	18000	1750	19400	3100

[1] On request

Rating plates

For motor sizes 71 to 132 the rating plate gives one current value for the voltage area. That is the highest current that can occur within the voltage area with the given output.

For motor sizes 160 to 400 the rating plate is in table form giving values for speed, current and power factor for six voltages.

Motor sizes M2QA and M2BA 71 to 132

ABB Motors CE

3~Mot. M2BA 132M4A IEC34-1

3GBA132310-ADA

6208/C3 6207/C3 IP cl. F

V	Hz	r/min		cosø	A
380-420Δ	50	1440	7.5	0.85	15.2
660-690Y	50	1440	7.5	0.85	8.78
440-480Δ	60	1730	8.6	0.86	14.74

No 3010071152 73 kg

M000283

Motor sizes M3BP 160 to 250

ABB Motors CE

3 ~ motor M3BP 160 MA 2

IEC 160 M/L 42

S1 No 01654321010002

Ins.cl. F IP 55

V	Hz	kW	r/min	A	cos φ	IA/IN	tE/s
690 Y	50	11	2930	11.5	0.88		
400 D	50	11	2930	20	0.88		
660 Y	50	11	2915	11.8	0.89		
380 D	50	11	2915	20.5	0.89		
415 D	50	11	2935	19.4	0.86		
440 D	60	12.5	3515	20.5	0.89		

Prod. code 3GBP 161 101 - ADA

6309/C3 6309/C3 105 kg

3GZV 193 D09-1 IEC 34-1

M000284

Motor sizes M2QA 160 to 250

ABB ABB Motors CE

3 ~ motor M2QA 180 L4A EFF2

IEC 180 L 48

S1 No 292229936

Cert.no Ins.cl. F IP 55

V	Hz	kW	r/min	A	cos φ	IA/IN	tE/s
690 Y	50	22	1470	22.86	0.88		
400 Δ	50	22	1470	39.44	0.88		
660 Y	50	22	1465	23.37	0.90		
380 Δ	50	22	1465	40.59	0.90		
415 Δ	50	22	1475	38.90	0.86		
440 Δ	60	25.3	1764	40.06	0.89		

Cat. no 3GQA 182 501 - ADA

6310/C3 6210/C3 186 kg

IEC 34-1

M000100

Motor sizes M3BP 280 to 450 and M2BAT 280 to 355

Rating plate

ABB Oy, Electrical Machines
LV Motors, Vaasa, Finland

CE

3~Motor M3BP 315 SMB 4 B3

IEC 315 S/M 80

S1 No. 3291111 7711 SM

Ins.cl. F IP 55

V	Hz	kW	r/min	A	cosφ	Duty
690 Y	50	160	1487	166	0.85	
400 D	50	160	1487	287	0.85	
660 Y	50	160	1485	171	0.86	
380 D	50	160	1485	296	0.86	
415 D	50	160	1488	279	0.84	
440 D	60	185	1785	295	0.86	

Prod.code 3GBP312230-ADG

Nmax 2300 r/min

6319/C3 6316/C3 1000 kg

ABB IEC 60034-1

M000286

Motor sizes M3BP 280 to 450 and M2BAT 355

Lubrication plate

ABB

Regreasing intervals in duty hours

Bearings 6319 6316

Amount of grease 90g 70g

Mounting	Ambient temp.	1800 r/min	1500 r/min	1000 r/min	500-900 r/min
Hor	25°C	6500	8500	12500	16000
Hor	40°C	3250	4250	6250	8000
Vert	25°C	3250	4250	6250	8000
Vert	40°C	1630	2130	3130	4000

Do not exceed the motor max. speed

The following or similar high performance grease can be used:

Esso	Unirex N2, N3 or S2	Mobil	Mobilith SHC 100
Shell	Albida EMS2	Klüber	Klüberplex BEM 41-132
SKF	LGHQ 3	FAG	Arcanol TEMP110

See the "Low Voltage Motors Manual"

M000287

Ordering information

When placing an order, please state the following minimum data in the order, as in example on the right.

The product code of the motor is composed in accordance with the following example.

Motor type	M3BP 160L
Pole number	2
Mounting arrangement (IM code)	IM B3 (IM 1001)
Rated output	18.5 kW
Product code	3GBP161103-ADA
Variant codes if needed	

Motor size

A	B	C	D.E.F.	G
M3BP	**160 L**	**3GBP 161 103 -**	**ADA.**	**003 etc.**

1 2 3 4 5 6 7 8 9 10 11 12 13 14

A Motor type
B Motor size
C Product code
D Mounting arrangement code
E Voltage and frequency code
F Generation code
G Variant codes

Explanation of the product code:

Positions 1 to 4
3GBA/3GBP = Totally enclosed fan cooled squirrel cage motor with cast iron frame

Positions 5 and 6
IEC-frame

07 = 71	**20** = 200
08 = 80	**22** = 225
09 = 90	**25** = 250
10 = 100	**28** = 280
11 = 112	**31** = 315
13 = 132	**35** = 355
16 = 160	**40** = 400
18 = 180	**45** = 450

Position 7
Speed (Pole pairs)
1 = 2 poles
2 = 4 poles
3 = 6 poles
4 = 8 poles
5 = 10 poles
6 = 12 poles
7 = >12 poles
8 = Two-speed motors for fan drive
9 = Multi-speed motors, two-speed motors for constant torque

Position 8 to 10
Serial number

Position 11
- (dash)

Position 12
Mounting arrangement
A = Foot-mounted, top-mounted terminal box
R = Foot-mounted, terminal box RHS seen from D-end
L = Foot-mounted, terminal box LHS seen from D-end
B = Flange-mounted, large flange
C = Flange-mounted, small flange (sizes 71 to 112)
H = Foot- and flange-mounted, terminal box top-mounted
J = Foot- and flange-mounted, small flange with tapped holes
S = Foot- and flange-mounted, terminal box RHS seen from D-end
T = Foot- and flange-mounted, terminal box LHS seen from D-end
V = Flange-mounted, special flange
F = Foot- and flange-mounted, special flange

Position 13
Voltage and frequency code
See table below

Position 14
Generation code
A, B, C...

The product code must be, if needed, followed by variant codes.

4

Code letters for supplementing the product code - single speed motors

Motor size	Code letter for voltage and frequency Direct start or, with Δ-connection, also Y/Δ-start S 50Hz	60 Hz	D 50 Hz	60 Hz	H 50 Hz	E 50 Hz	60 Hz	F 50 Hz	T 50 Hz	U 50 Hz	X
71-132	220-240 VΔ	440-480 VY	380-420 VΔ	440-480VΔ	415 VΔ	500 VΔ	575 VΔ	500 VY	660 VΔ	690 VΔ	Other rated voltage.
	380-420 VY	-	660-690 VY	-	-	-	-	-	-	-	
160-450	220. 230 VΔ	-	380. 400. 415 VΔ	440VΔ	415 VΔ	500 VΔ	-	500 VY	660 VΔ	690 VΔ	connection or frequency, 690 V maximum
	380.400.415VY	440VY	660. 690 VY	-	-	-	-	-	-	-	

Code letters for supplementing the product code - two speed motors

Motor size	Code letter for voltage (50 Hz) A	S	B	D	H	E	X
160-450	220 V	230 V	380 V	400 V	415 V	500 V	Other rated voltage, connection or frequency, 690 V maximum

Marine cast iron motors

Technical data, Non-Essential/Essential Services

IP 55 - IC 411 - temperature rise 90 K

Output kW	Motor type		Product code		Speed r/min	Effi-ciency %	Power factor cos φ	Current I_N A	Current I_s / I_N	Torque T_N Nm	Torque T_s / T_N	Torque T_{max} / T_N
3000 r/min = 2 poles					**380 V 50 Hz**				**Basic design**			
0.4	**M2BA**	**71 M2 A**	3GBA	071 310-••C	2770	67.0	0.82	1.1	4.3	1.4	2.3	2.4
0.6	**M2BA**	**71 M2 B**	3GBA	071 320-••C	2790	71.0	0.83	1.5	4.6	2.1	2.3	2.4
0.8	**M2BA**	**80 M2 A**	3GBA	081 310-••C	2830	77.0	0.88	1.8	5.5	2.7	2.5	2.1
1.2	**M2BA**	**80 M2 B**	3GBA	081 320-••C	2835	80.0	0.88	2.6	5.7	4	2.6	2.3
1.6	**M2BA**	**90 S2 A**	3GBA	091 110-••C	2850	81.5	0.88	3.4	6.2	5.4	2.6	2.5
2.3	**M2BA**	**90 L2 A**	3GBA	091 510-••C	2840	84.0	0.88	4.7	6.7	7.7	2.8	3.0
3.2	**M2BA**	**100 L2 A**	3GBA	101 510-••C	2870	85.0	0.88	6.5	7.0	10.6	2.7	3.1
4.2	**M2BA**	**112 M2 A**	3GBA	111 310-••C	2880	85.0	0.89	8.4	7.4	13.9	2.5	3.0
5.8	**M2BA**	**132 S2 A**	3GBA	131 110-••C	2900	87.0	0.88	11.5	6.7	19.1	2.5	3.0
8	**M2BA**	**132 S2 B**	3GBA	131 120-••C	2900	87.5	0.89	15.6	6.9	26.3	2.5	3.1
11	**M3BP**	**160 MA**	3GBP	161 101-••A	2915	90.8	0.89	20.5	5.7	36	1.9	2.5
15	**M3BP**	**160 M**	3GBP	161 102-••A	2905	91.0	0.90	27.5	5.8	49	2.1	2.4
18.5	**M3BP**	**160 L**	3GBP	161 103-••A	2910	92.0	0.91	33.5	6.5	61	2.4	2.6
22	**M3BP**	**180 M**	3GBP	181 101-••A	2930	92.4	0.90	40.5	6.5	71	2.4	2.7
30	**M3BP**	**200 MLA**	3GBP	201 001-••A	2955	93.0	0.89	55	7.7	97	2.6	2.8
37	**M3BP**	**200 MLB**	3GBP	201 002-••A	2950	93.4	0.89	68	6.4	120	2.0	2.6
45	**M3BP**	**225 SMB**	3GBP	221 001-••A	2955	94.0	0.89	82	7.0	145	2.3	2.6
55	**M3BP**	**250 SMA**	3GBP	251 001-••A	2960	94.1	0.89	100	7.1	177	2.1	2.7
75	**M3BP**	**280 SMA**	3GBP	281 210-••G	2975	94.7	0.89	137	6.9	241	1.8	2.7
90	**M3BP**	**280 SMB**	3GBP	281 220-••G	2972	95.0	0.90	159	6.6	289	1.8	2.6
110	**M3BP**	**315 SMA**	3GBP	311 210-••G	2980	95.1	0.87	202	6.9	353	1.8	2.7
132	**M3BP**	**315 SMB**	3GBP	311 220-••G	2980	95.4	0.89	238	6.7	423	2.0	2.7
160	**M3BP**	**315 SMC**	3GBP	311 230-••G	2979	96.1	0.90	282	6.8	513	2.1	2.7
200	**M3BP**	**315 MLA**	3GBP	311 410-••G	2977	96.3	0.90	354	7.0	642	2.3	2.7
250[1)]	**M3BP**	**355 SMA**	3GBP	351 210-••G	2982	96.4	0.90	445	6.9	800	1.8	2.9
315[1)]	**M3BP**	**355 SMB**	3GBP	351 220-••G	2978	96.5	0.89	560	6.3	1010	1.9	2.7
355[1)]	**M3BP**	**355 SMC**	3GBP	351 230-••G	2981	96.8	0.89	632	6.6	1137	2.0	2.7
400[1)]	**M3BP**	**355 MLA**	3GBP	351 410-••G	2980	96.9	0.89	710	6.4	1282	2.0	2.6
450[1)]	**M3BP**	**355 MLB**	3GBP	351 420-••G	2980	97.0	0.91	785	7.2	1442	2.0	3.2
500[1)2)]	**M3BP**	**355 LKA**	3GBP	351 810-••G	2979	97.0	0.91	870	6.8	1603	1.8	3.1
560[1)2)]	**M3BP**	**355 LKB**	3GBP	351 820-••G	2980	97.1	0.91	980	7.2	1794	2.0	3.2
560[3)]	**M3BP**	**400 LA**	3GBP	401 510-••G	2986	97.2	0.90	980	7.1	1791	1.9	3.0
560[3)4)]	**M3BP**	**400 LKA**	3GBP	401 810-••G	2986	97.2	0.90	980	7.1	1791	1.9	3.0
630[3)]	**M3BP**	**400 LB**	3GBP	401 520-••G	2985	97.4	0.90	1100	7.1	2014	1.9	3.0
630[3)4)]	**M3BP**	**400 LKB**	3GBP	401 820-••G	2985	97.4	0.90	1100	7.1	2014	1.9	3.0
710[3)]	**M3BP**	**400 LC**	3GBP	401 530-••G	2985	97.4	0.90	1230	7.1	2271	2.3	3.0
710[3)4)]	**M3BP**	**400 LKC**	3GBP	401 830-••G	2985	97.4	0.90	1230	7.1	2271	2.3	3.0
800[3)]	**M3BP**	**450 LA**	3GBP	451 510-••G	2989	97.3	0.89	1400	7.2	2556	1.2	2.8
900[3)]	**M3BP**	**450 LB**	3GBP	451 520-••G	2989	97.4	0.89	1575	7.1	2875	1.3	2.8
3000 r/min = 2 poles					**380 V 50 Hz**				**High-output design**			
21	**M3BP**	**160 LB**	3GBP	161 104-••A	2915	91.3	0.92	38	6.5	69	2.2	2.8
30	**M3BP**	**180 LB**	3GBP	181 102-••A	2940	93.9	0.90	55	7.1	97	2.4	2.8
45	**M3BP**	**200 MLC**	3GBP	201 003-••A	2945	94.0	0.89	82	7.5	146	2.8	3.0
55	**M3BP**	**225 SMC**	3GBP	221 002-••A	2950	94.3	0.89	100	6.7	177	2.5	2.7
75	**M3BP**	**250 SMB**	3GBP	251 002-••A	2965	94.6	0.90	134	7.4	242	2.5	2.8
110	**M3BP**	**280 SMC**	3GBP	281 230-••G	2974	95.6	0.91	194	7.1	353	2.1	2.7
250	**M3BP**	**315 LKA**	3GBP	311 810-••G	2977	96.3	0.89	444	7.3	802	2.5	2.6
315	**M3BP**	**315 LKC**	3GBP	311 830-••G	2978	96.7	0.90	552	7.9	1010	2.8	2.9

1) -3dB(A) sound pressure level reduction with uniderectional fan construction. Direction of rotation must be stated when ordering, see variant codes 044 and 045.

2) Available only with 50 Hz.

3) Uniderectional fan construction as standard. Direction of rotation must be stated when ordering, see variant codes 044 and 045.

4) Size with alternative dimensions

5) On request.

The bullets in the product code indicate choice of mounting arrangement, voltage and frequency, generation code (see ordering information page).

Marine cast iron motors

Technical data, Non-Essential/Essential Services

IP 55 - IC 411 - temperature rise 90 K

Output kW	Motor type		Speed r/min	Effi-ciency %	Power factor cos φ	Current I_N / A	Current I_s / I_N	Torque T_N / Nm	Torque T_s / T_N	Torque T_{max} / T_N	Moment of inertia J=1/4 GD² kgm²	Weight kg
3600 r/min = 2 poles			**440 V 60 Hz**					**Basic design**				
0.5	**M2BA**	**71 M2 A**	3370	67.0	0.83	1.2	4.3	1.4	2.3	2.4	0.00031	11
0.7	**M2BA**	**71 M2 B**	3390	71.0	0.84	1.5	4.6	2	2.3	2.4	0.0004	11
0.9	**M2BA**	**80 M2 A**	3430	77.0	0.89	1.7	5.5	2.5	2.5	2.1	0.00097	17
1.3	**M2BA**	**80 M2 B**	3435	80.0	0.89	2.4	5.7	3.6	2.6	2.3	0.0012	18
1.8	**M2BA**	**90 S2 A**	3450	81.5	0.89	3.3	6.2	5	2.6	2.5	0.0015	22
2.7	**M2BA**	**90 L2 A**	3440	84.0	0.89	4.7	6.7	7.5	2.8	3.0	0.002	25
3.7	**M2BA**	**100 L2 A**	3470	85.0	0.89	6.4	7.0	10.2	2.7	3.1	0.0044	34
4.9	**M2BA**	**112 M2 A**	3480	85.0	0.90	8.4	7.4	13.4	2.5	3.0	0.0075	45
6.7	**M2BA**	**132 S2 A**	3500	87.0	0.90	11.2	6.7	18.3	2.5	3.0	0.013	61
9.1	**M2BA**	**132 S2 B**	3500	87.5	0.90	15.2	6.9	24.8	2.5	3.1	0.016	68
14.5	**M3BP**	**160 MA**	3485	91.0	0.90	24	5.0	39.7	1.7	2.2	0.039	105
17.5	**M3BP**	**160 M**	3505	91.4	0.91	28.5	5.8	48	2.0	2.4	0.047	118
21	**M3BP**	**160 L**	3510	92.3	0.92	33.5	6.7	57	2.3	2.6	0.053	133
26.5	**M3BP**	**180 M**	3520	92.1	0.90	42.5	6.3	72	2.2	2.6	0.077	178
35	**M3BP**	**200 MLA**	3555	93.1	0.89	55	7.7	94	2.3	2.7	0.15	250
43	**M3BP**	**200 MLB**	3550	93.4	0.90	67	6.4	116	1.9	2.5	0.18	270
54	**M3BP**	**225 SMB**	3555	94.1	0.89	86	6.8	145	2.0	2.5	0.26	335
65	**M3BP**	**250 SMA**	3555	94.3	0.91	101	6.9	175	1.9	2.6	0.49	420
90	**M3BP**	**280 SMA**	3573	94.3	0.90	138	6.8	241	1.6	2.6	0.8	625
105	**M3BP**	**280 SMB**	3570	94.7	0.90	163	6.4	281	1.6	2.5	0.9	665
125	**M3BP**	**315 SMA**	3580	94.6	0.88	198	7.3	333	1.6	2.7	1.2	880
155	**M3BP**	**315 SMB**	3578	95.0	0.89	240	6.8	414	1.8	2.6	1.4	940
185	**M3BP**	**315 SMC**	3578	95.6	0.90	282	7.1	494	1.9	2.6	1.7	1025
230	**M3BP**	**315 MLA**	3576	95.9	0.90	355	7.0	614	2.1	2.7	2.1	1190
290[1)]	**M3BP**	**355 SMA**	3580	96.2	0.90	448	6.8	774	1.7	2.9	3	1600
362[1)]	**M3BP**	**355 SMB**	3576	96.4	0.89	560	6.3	967	1.8	2.7	3.4	1680
410[1)]	**M3BP**	**355 SMC**	3580	96.6	0.89	628	6.6	1094	1.8	2.6	3.6	1750
450[1)]	**M3BP**	**355 MLA**	3578	96.7	0.89	690	6.7	1201	1.9	2.6	4.1	2000
510[1)]	**M3BP**	**355 MLB**	3580	97	0.91	770	7.3	1360	1.9	3.3	4.3	2080
[5)1)2)]	**M3BP**	**355 LKA**	[5)]	[5)]	[5)]	[5)]	[5)]	[5)]	[5)]	[5)]	4.8	2320
[5)1)2)]	**M3BP**	**355 LKB**	[5)]	[5)]	[5)]	[5)]	[5)]	[5)]	[5)]	[5)]	5.2	2460
630[3)]	**M3BP**	**400 LA**	3586	97.1	0.90	950	7.4	1678	1.8	3.1	7.9	2950
630[3)4)]	**M3BP**	**400 LKA**	3586	97.1	0.90	950	7.4	1678	1.8	3.1	7.9	2950
710[3)]	**M3BP**	**400 LB**	3585	97.2	0.90	1070	7.3	1891	1.9	3.1	8.2	3050
710[3)4)]	**M3BP**	**400 LKB**	3585	97.2	0.90	1070	7.3	1891	1.9	3.1	8.2	3050
780[3)]	**M3BP**	**400 LC**	3586	97.2	0.90	1170	7.5	2077	2.3	3.2	9.3	3300
780[3)4)]	**M3BP**	**400 LKC**	3586	97.2	0.90	1170	7.5	2077	2.3	3.2	9.3	3300
900[3)]	**M3BP**	**450 LA**	3589	97.1	0.89	1365	7.2	2395	1.1	2.8	12.5	4000
1000[3)]	**M3BP**	**450 LB**	3589	97.2	0.89	1515	7.2	2661	1.3	2.8	14	4200
3600 r/min = 2 poles			**440 V 60 Hz**					**High-output design**				
24	**M3BP**	**160 LB**	3515	92.5	0.92	38	6.7	65	2.1	2.8	0.058	140
35.6	**M3BP**	**180 LB**	3540	93.6	0.91	56	6.9	96	2.2	2.6	0.092	194
52	**M3BP**	**200 MLC**	3545	94.3	0.89	82	7.6	140	2.5	2.9	0.19	280
65	**M3BP**	**225 SMC**	3550	94.5	0.90	103	6.6	174	2.3	2.6	0.29	355
86	**M3BP**	**250 SMB**	3565	95.1	0.90	134	7.4	230	2.2	2.8	0.57	465
125	**M3BP**	**280 SMC**	3573	95.5	0.91	191	7.3	334	2.0	2.7	1.15	725
288	**M3BP**	**315 LKA**	3576	96.1	0.89	442	7.5	769	2.4	2.6	2.65	1440
335	**M3BP**	**315 LKC**	3580	96.6	0.90	510	8.8	894	2.9	3.1	3.3	1630

Marine cast iron motors

Technical data, Non-Essential/Essential Services

IP 55 - IC 411 - temperature rise 90 K

Output kW	Motor type		Product code		Speed r/min	Effi-ciency %	Power factor cos φ	Current I_N A	Current I_s / I_N	Torque T_N Nm	Torque T_s / T_N	Torque T_{max} / T_N
1500 r/min = 4 poles					**380 V 50 Hz**				**Basic design**			
0.3	**M2BA**	**71 M4 A**	3GBA	072 310-••C	1390	66	0.74	0.9	3.5	2.1	2.0	2.3
0.4	**M2BA**	**71 M4 B**	3GBA	072 320-••C	1380	68	0.74	1.2	3.7	2.8	2.1	2.3
0.6	**M2BA**	**80 M4 A**	3GBA	082 310-••C	1420	75	0.77	1.6	4.7	4	2.5	2.2
0.8	**M2BA**	**80 M4 B**	3GBA	082 320-••C	1410	76	0.77	2.1	4.8	5.4	2.5	2.3
1.2	**M2BA**	**90 S4 A**	3GBA	092 110-••C	1410	78.5	0.77	3	4.8	8.1	2.2	2.3
1.6	**M2BA**	**90 L4 A**	3GBA	092 510-••C	1410	80.5	0.78	3.9	4.9	10.8	2.4	2.5
2.3	**M2BA**	**100 L4 A**	3GBA	102 510-••C	1425	82.5	0.84	5	5.6	15.4	2.6	2.8
3.2	**M2BA**	**100 L4 B**	3GBA	102 520-••C	1415	84.5	0.84	6.8	6.2	21.6	3.0	3.1
4.2	**M2BA**	**112 M4 A**	3GBA	112 310-••C	1435	85.5	0.84	8.9	6.7	28	2.8	3.2
5.8	**M2BA**	**132 S4 A**	3GBA	132 110-••C	1430	87	0.84	12.1	6.6	38.5	2.4	3.0
8	**M2BA**	**132 M4 A**	3GBA	132 310-••C	1430	88.5	0.86	16	6.9	53	2.7	3.1
11	**M3BP**	**160 M**	3GBP	162 101-••A	1460	91.1	0.83	22.5	7.1	72	2.9	3.1
15	**M3BP**	**160 L**	3GBP	162 102-••A	1455	91.8	0.84	30	7.4	98	2.7	3.1
18.5	**M3BP**	**180 M**	3GBP	182 101-••A	1465	91.7	0.85	36	6.3	120	2.6	2.6
22	**M3BP**	**180 L**	3GBP	182 102-••A	1465	92.7	0.86	42	6.5	143	2.6	2.8
30	**M3BP**	**200 MLB**	3GBP	202 001-••A	1470	93.1	0.85	58	6.9	195	2.3	2.5
37	**M3BP**	**225 SMA**	3GBP	222 001-••A	1475	93.6	0.84	72	6.9	239	2.9	3.0
45	**M3BP**	**225 SMB**	3GBP	222 002-••A	1475	94	0.85	86	6.9	291	2.5	2.7
55	**M3BP**	**250 SMA**	3GBP	252 001-••A	1475	94.4	0.86	103	7.0	356	2.7	2.8
75	**M3BP**	**280 SMA**	3GBP	282 210-••G	1482	94.7	0.86	141	6.2	483	2.2	2.5
90	**M3BP**	**280 SMB**	3GBP	282 220-••G	1481	95.2	0.87	166	6.5	580	2.2	2.4
110	**M3BP**	**315 SMA**	3GBP	312 210-••G	1486	95.5	0.87	202	6.5	707	1.8	2.3
132	**M3BP**	**315 SMB**	3GBP	312 220-••G	1486	95.7	0.87	242	6.4	849	2.0	2.4
160	**M3BP**	**315 SMC**	3GBP	312 230-••G	1485	95.9	0.86	296	6.6	1029	2.1	2.6
200	**M3BP**	**315 MLA**	3GBP	312 410-••G	1484	96.1	0.87	366	6.6	1286	2.2	2.6
250	**M3BP**	**355 SMA**	3GBP	352 210-••G	1487	96.4	0.87	455	6.4	1605	2.0	2.4
315	**M3BP**	**355 SMB**	3GBP	352 220-••G	1487	96.7	0.87	571	6.6	2023	2.0	2.5
355	**M3BP**	**355 SMC**	3GBP	352 230-••G	1485	96.5	0.87	645	6.1	2283	2.1	2.4
400	**M3BP**	**355 MLA**	3GBP	352 410-••G	1488	96.8	0.86	740	6.1	2567	2.0	2.3
450	**M3BP**	**355 MLB**	3GBP	352 420-••G	1488	96.8	0.87	825	6.2	2888	2.0	2.6
500	**M3BP**	**355 LKA**	3GBP	352 810-••G	1489	97	0.87	907	6.2	3207	1.8	2.7
560	**M3BP**	**355 LKB**	3GBP	352 820-••G	1488	96.9	0.86	1020	6.6	3594	2.3	2.4
560	**M3BP**	**400 LA**	3GBP	402 510-••G	1490	97	0.86	1020	6.7	3589	2.1	2.7
560[1)]	**M3BP**	**400 LKA**	3GBP	402 810-••G	1490	97	0.86	1020	6.7	3589	2.1	2.7
630	**M3BP**	**400 LB**	3GBP	402 520-••G	1490	97	0.88	1130	6.9	4038	2.0	2.8
630[1)]	**M3BP**	**400 LKB**	3GBP	402 820-••G	1490	97	0.88	1130	6.9	4038	2.0	2.8
710	**M3BP**	**400 LC**	3GBP	402 530-••G	1490	97.1	0.87	1290	6.9	4550	2.1	2.8
710[1)]	**M3BP**	**400 LKC**	3GBP	402 830-••G	1490	97.1	0.87	1290	6.9	4550	2.1	2.8
800	**M3BP**	**450 LA**	3GBP	452 510-••G	1491	96.9	0.87	1440	6.3	5124	1.2	2.5
900	**M3BP**	**450 LB**	3GBP	452 520-••G	1491	97.1	0.87	1620	6.3	5764	1.2	2.5
1000	**M3BP**	**450 LC**	3GBP	452 530-••G	1490	97.1	0.87	1800	6.1	6409	1.2	2.4
1500 r/min = 4 poles					**380 V 50 Hz**				**High-output design**			
17.5	**M3BP**	**160 LB**	3GBP	162 103-••A	1450	90.7	0.84	35	6.2	115	2.5	2.9
28	**M3BP**	**180 LB**	3GBP	182 103-••A	1465	92.5	0.85	55	6.6	182	2.4	2.7
37	**M3BP**	**200 MLB**	3GBP	202 002-••A	1475	93.3	0.85	71	7.2	241	3.5	2.8
55	**M3BP**	**225 SMC**	3GBP	222 003-••A	1475	94.3	0.84	105	6.8	357	3.1	2.7
75	**M3BP**	**250 SMB**	3GBP	252 002-••A	1475	94.5	0.87	139	6.4	486	2.8	2.7
110	**M3BP**	**280 SMC**	3GBP	282 230-••G	1483	95.6	0.87	202	6.9	708	2.6	2.7
250	**M3BP**	**315 LKA**	3GBP	312 810-••G	1485	96.1	0.87	457	6.7	1608	2.2	2.6
280	**M3BP**	**315 LKB**	3GBP	312 820-••G	1485	96.3	0.88	502	6.8	1801	2.3	2.7
315	**M3BP**	**315 LKC**	3GBP	312 830-••G	1486	96.4	0.87	570	7.0	2024	2.3	2.8

[1)] Size with alternative dimensions

The bullets in the product code indicate choice of mounting arrangement, voltage and frequency, generation code (see ordering information page).

Marine cast iron motors

Technical data, Non-Essential/Essential Services

IP 55 - IC 411 - temperature rise 90 K

Output kW	Motor type		Speed r/min	Effi-ciency %	Power factor cos φ	Current I_N A	Current I_s / I_N	Torque T_N Nm	Torque T_s / T_N	Torque T_{max} / T_N	Moment of inertia J=1/4 GD² kgm²	Weight kg
1800 r/min = 4 poles			**440 V 60 Hz**					**Basic design**				
0.3	**M2BA**	**71 M4 A**	1690	66.0	0.75	0.8	3.5	1.7	2.0	2.3	0.0006	11
0.5	**M2BA**	**71 M4 B**	1680	68.0	0.75	1.3	3.7	2.8	2.1	2.3	0.00077	11
0.7	**M2BA**	**80 M4 A**	1720	75.0	0.78	1.6	4.7	3.9	2.5	2.2	0.0018	17
0.9	**M2BA**	**80 M4 B**	1710	76.0	0.78	2	4.8	5	2.5	2.3	0.0021	18
1.3	**M2BA**	**90 S4 A**	1710	78.5	0.78	2.8	4.8	7.3	2.2	2.3	0.0029	25
1.8	**M2BA**	**90 L4 A**	1710	80.5	0.79	3.7	4.9	10.1	2.4	2.5	0.0037	26
2.7	**M2BA**	**100 L4 A**	1725	82.5	0.85	5.1	5.6	14.9	2.6	2.8	0.0075	34
3.7	**M2BA**	**100 L4 B**	1715	84.5	0.85	6.8	6.2	20.6	3.0	3.1	0.0098	35
4.9	**M2BA**	**112 M4 A**	1735	85.5	0.85	8.8	6.7	27	2.8	3.2	0.014	44
6.7	**M2BA**	**132 S4 A**	1730	87.0	0.85	11.9	6.6	37	2.4	3.0	0.031	65
9.1	**M2BA**	**132 M4 A**	1730	88.5	0.87	15.5	6.9	50	2.7	3.1	0.04	79
15.5	**M3BP**	**160 M**	1745	91.5	0.85	27	5.9	84	2.3	2.5	0.067	115
18	**M3BP**	**160 L**	1750	91.8	0.84	30	7.2	98	2.5	3.2	0.091	127
22	**M3BP**	**180 M**	1765	92.5	0.85	37.5	6.5	119	2.5	2.5	0.161	175
26	**M3BP**	**180 L**	1760	92.6	0.85	44	6.4	144	2.5	2.8	0.191	141
38	**M3BP**	**200 MLB**	1765	93.2	0.86	63	6.1	206	2.0	2.3	0.34	205
44	**M3BP**	**225 SMA**	1775	93.8	0.84	74	6.8	237	2.5	2.8	0.37	310
55	**M3BP**	**225 SMB**	1775	94.0	0.85	92	6.9	296	2.3	2.5	0.42	310
65	**M3BP**	**250 SMA**	1775	94.3	0.86	107	6.8	350	2.5	2.5	0.72	420
88	**M3BP**	**280 SMA**	1781	94.9	0.87	141	6.3	472	2.0	2.5	1.25	625
105	**M3BP**	**280 SMB**	1780	95.2	0.87	167	6.6	563	2.1	2.4	1.5	665
125	**M3BP**	**315 SMA**	1786	95.5	0.87	199	6.7	668	1.7	2.3	2.3	900
150	**M3BP**	**315 SMB**	1785	95.9	0.87	236	6.7	802	2.0	2.5	2.6	960
185	**M3BP**	**315 SMC**	1785	96.1	0.86	295	6.8	990	2.0	2.6	2.9	1000
230	**M3BP**	**315 MLA**	1784	96.3	0.87	362	6.8	1231	2.2	2.6	3.5	1160
288	**M3BP**	**355 SMA**	1786	96.4	0.86	455	6.5	1540	1.9	2.4	5.9	1610
362	**M3BP**	**355 SMB**	1786	96.8	0.87	570	6.7	1936	1.9	2.5	6.9	1780
400	**M3BP**	**355 SMC**	1785	96.5	0.87	630	6.4	2140	2.0	2.5	7.2	1820
450	**M3BP**	**355 MLA**	1788	96.8	0.86	720	6.4	2403	2.0	2.4	8.4	2140
500	**M3BP**	**355 MLB**	1789	96.9	0.87	785	6.6	2669	2.0	2.7	8.4	2140
575	**M3BP**	**355 LKA**	1788	97.0	0.87	895	6.5	3071	1.9	2.7	10	2500
620	**M3BP**	**355 LKB**	1788	96.9	0.86	975	7.1	3311	2.3	2.5	10.6	2600
630	**M3BP**	**400 LA**	1790	97.1	0.86	990	7.0	3361	2.1	2.7	15	3200
630[1)]	**M3BP**	**400 LKA**	1790	97.1	0.86	990	7.0	3361	2.1	2.7	15	3200
710	**M3BP**	**400 LB**	1790	97.1	0.88	1090	7.3	3788	1.9	2.8	16	3300
710[1)]	**M3BP**	**400 LKB**	1790	97.1	0.88	1090	7.3	3788	1.9	2.8	16	3300
780	**M3BP**	**400 LC**	1791	97.3	0.87	1225	7.3	4159	2.1	3.0	17	3400
780	**M3BP**	**400 LKC**	1791	97.3	0.87	1225	7.3	4159	2.1	3.0	17	3400
900	**M3BP**	**450 LA**	1790	96.7	0.87	1405	6.4	4801	1.1	2.5	23	4050
1000	**M3BP**	**450 LB**	1791	96.9	0.87	1555	6.5	5332	1.1	2.5	25	4350
1100	**M3BP**	**450 LC**	1790	97.0	0.87	1710	6.3	5868	1.1	2.4	30	4700
1800 r/min = 4 poles			**440 V 60 Hz**					**High-output design**				
20	**M3BP**	**160 LB**	1750	91.4	0.84	35	6.4	109	2.4	2.9	0.102	135
32.5	**M3BP**	**180 LB**	1765	93.2	0.85	55	6.6	176	2.3	2.7	0.225	203
42	**M3BP**	**200 MLB**	1775	93.5	0.85	71	7.4	227	3.3	2.8	0.34	275
65	**M3BP**	**225 SMC**	1775	94.2	0.85	109	6.7	351	2.8	2.6	0.49	355
88	**M3BP**	**250 SMB**	1775	94.6	0.87	142	6.3	474	2.7	2.6	0.88	465
125	**M3BP**	**280 SMC**	1783	95.7	0.87	197	7.3	669	2.6	2.7	1.85	725
288	**M3BP**	**315 LKA**	1784	96.1	0.87	455	7.0	1542	2.2	2.6	4.4	1410
322	**M3BP**	**315 LKB**	1785	96.3	0.88	500	7.2	1723	2.3	2.7	5	1520
362	**M3BP**	**315 LKC**	1786	96.4	0.88	560	7.4	1936	2.3	2.9	5.5	1600

Marine cast iron motors

Technical data, Non-Essential/Essential Services

IP 55 - IC 411 - temperature rise 90 K

Output kW	Motor type		Product code		Speed r/min	Effi-ciency %	Power factor cos φ	Current I_N A	Current I_s / I_N	Torque T_N Nm	Torque T_s / T_N	Torque T_{max} / T_N
1000 r/min = 6 poles					**380 V 50 Hz**				**Basic design**			
0.2	**M2BA**	**71 M6 A**	3GBA	073 310-••C	850	49	0.60	1	3	2.2	1.9	2.0
0.3	**M2BA**	**71 M6 B**	3GBA	073 320-••C	860	53	0.61	1.4	3.2	3.3	2.2	2.4
0.4	**M2BA**	**80 M6 A**	3GBA	083 310-••C	925	68	0.67	1.3	3.2	4.1	1.7	2.2
0.6	**M2BA**	**80 M6 B**	3GBA	083 320-••C	930	70	0.67	1.9	3.6	6.2	1.7	2.2
0.8	**M2BA**	**90 S6 A**	3GBA	093 110-••C	935	74	0.71	2.3	4.3	8.2	2.1	2.5
1.2	**M2BA**	**90 L6 A**	3GBA	093 510-••C	920	75	0.75	3.2	4.1	12.5	2.0	2.3
1.6	**M2BA**	**100 L6 A**	3GBA	103 510-••C	950	79	0.72	4.3	5	16.1	2.3	2.7
2.3	**M2BA**	**112 M6 A**	3GBA	113 310-••C	950	83	0.76	5.5	5.7	23.1	2.2	2.7
3.2	**M2BA**	**132 S6 A**	3GBA	133 110-••C	955	84.5	0.79	7.3	6.2	32	2.2	3.0
4.2	**M2BA**	**132 M6 A**	3GBA	133 310-••C	955	85	0.77	9.7	6.5	42	2.6	3.3
5.8	**M2BA**	**132 M6 B**	3GBA	133 320-••C	955	87	0.80	12.7	6.9	58	2.6	3.1
7.5	**M3BP**	**160 M**	3GBP	163 101-••A	960	88.7	0.80	16.1	6	74	1.8	2.5
11	**M3BP**	**160 L**	3GBP	163 102-••A	960	89.4	0.80	23.5	6.3	109	1.9	3.1
15	**M3BP**	**180 L**	3GBP	183 101-••A	970	90.9	0.79	32	6.2	148	1.8	3.0
18.5	**M3BP**	**200 MLA**	3GBP	203 001-••A	980	90.8	0.81	38	6.4	181	2.4	2.3
22	**M3BP**	**200 MLB**	3GBP	203 002-••A	980	91.6	0.81	45	6.3	214	2.6	2.7
30	**M3BP**	**225 SMB**	3GBP	223 001-••A	985	92.6	0.83	59	6.8	291	2.9	2.6
37	**M3BP**	**250 SMA**	3GBP	253 001-••A	985	93.3	0.84	72	6.5	359	2.8	2.6
45	**M3BP**	**280 SMA**	3GBP	283 210-••G	989	94.2	0.84	87	6.2	434	2.2	2.3
55	**M3BP**	**280 SMB**	3GBP	283 220-••G	988	94.5	0.84	106	6.3	532	2.4	2.3
75	**M3BP**	**315 SMA**	3GBP	313 210-••G	991	94.9	0.84	145	6.8	723	2.1	2.5
90	**M3BP**	**315 SMB**	3GBP	313 220-••G	991	95.4	0.85	169	6.8	867	2.2	2.5
110	**M3BP**	**315 SMC**	3GBP	313 230-••G	990	95.5	0.84	211	6.7	1061	2.2	2.6
132	**M3BP**	**315 MLA**	3GBP	313 410-••G	990	95.7	0.84	250	6.7	1273	2.3	2.7
160	**M3BP**	**355 SMA**	3GBP	353 210-••G	992	95.9	0.84	305	6.3	1540	1.8	2.3
200	**M3BP**	**355 SMB**	3GBP	353 220-••G	992	96.1	0.85	372	6.4	1925	1.9	2.4
250	**M3BP**	**355 SMC**	3GBP	353 230-••G	992	96.4	0.84	470	6.7	2407	2.3	2.6
315	**M3BP**	**355 MLB**	3GBP	353 420-••G	991	96.3	0.84	592	6.3	3035	2.2	2.4
355	**M3BP**	**355 LKA**	3GBP	353 810-••G	991	96.5	0.84	665	7	3421	2.4	2.6
400	**M3BP**	**355 LKB**	3GBP	353 820-••G	991	96.4	0.84	752	6.5	3854	2.3	2.3
400[1)]	**M3BP**	**400 LKA**	3GBP	403 810-••G	992	96.7	0.83	760	6.5	3851	2.0	2.4
400	**M3BP**	**400 LA**	3GBP	403 510-••G	992	96.7	0.83	760	6.5	3851	2.0	2.4
450	**M3BP**	**400 LB**	3GBP	403 520-••G	993	96.8	0.84	850	6.7	4327	2.1	2.5
450[1)]	**M3BP**	**400 LKB**	3GBP	403 820-••G	993	96.8	0.84	850	6.7	4327	2.1	2.5
500	**M3BP**	**400 LC**	3GBP	403 530-••G	992	96.8	0.84	940	6.5	4813	2.2	2.4
500[1)]	**M3BP**	**400 LKC**	3GBP	403 830-••G	992	96.8	0.84	940	6.5	4813	2.2	2.4
560	**M3BP**	**400 LD**	3GBP	403 540-••G	992	96.8	0.86	1035	6.6	5391	2.1	2.7
560[1)]	**M3BP**	**400 LKD**	3GBP	403 840-••G	992	96.8	0.86	1035	6.6	5391	2.1	2.7
630	**M3BP**	**450 LA**	3GBP	453 510-••G	993	96.9	0.85	1160	5.9	6058	1.0	2.3
710	**M3BP**	**450 LB**	3GBP	453 520-••G	994	97	0.86	1295	6.4	6821	1.2	2.3
800	**M3BP**	**450 LC**	3GBP	453 530-••G	994	97.1	0.85	1470	6.5	7686	1.2	2.5
1000 r/min = 6 poles					**380 V 50 Hz**				**High-output design**			
13.5	**M3BP**	**160 LB**	3GBP	163 103-••A	965	89.8	0.77	30.5	6.8	133	2.3	2.9
16.5	**M3BP**	**180 LB**	3GBP	183 102-••A	965	91	0.80	35	6.2	163	2.1	2.5
30	**M3BP**	**200 MLC**	3GBP	203 003-••A	980	91.5	0.83	57	6.6	294	3.2	2.7
37	**M3BP**	**225 SMC**	3GBP	223 002-••A	980	92.7	0.83	72	6.6	361	3.2	2.5
45	**M3BP**	**250 SMB**	3GBP	253 002-••A	985	93.5	0.84	87	6.5	437	2.8	2.5
75	**M3BP**	**280 SMC**	3GBP	283 230-••G	988	95	0.85	142	6.6	725	2.5	2.4
160	**M3BP**	**315 LKA**	3GBP	313 810-••G	991	95.7	0.84	304	6.7	1542	2.3	2.5
180	**M3BP**	**315 LKB**	3GBP	313 820-••G	990	95.8	0.84	342	6.7	1736	2.3	2.5
200	**M3BP**	**315 LKC**	3GBP	313 830-••G	988	95.6	0.84	380	6.1	1933	2.2	2.3

[1)] Size with alternative dimensions

The bullets in the product code indicate choice of mounting arrangement, voltage and frequency, generation code (see ordering information page).

Marine cast iron motors

Technical data, Non-Essential/Essential Services

IP 55 - IC 411 - temperature rise 90 K

Output kW	Motor type		Speed r/min	Effi-ciency %	Power factor cos φ	Current I_N / A	Current I_s / I_N	Torque T_N / Nm	Torque T_s / T_N	Torque T_{max} / T_N	Moment of inertia J=1/4 GD² kgm²	Weight kg
1200 r/min = 6 poles			**440 V 60 Hz**					**Basic design**				
0.2	**M2BA**	**71 M6 A**	1050	49.0	0.61	0.9	3.0	1.8	1.9	2.0	0.0006	11
0.3	**M2BA**	**71 M6 B**	1060	53.0	0.62	1.2	3.2	2.7	2.2	2.4	0.00082	11
0.5	**M2BA**	**80 M6 A**	1125	68.0	0.68	1.4	3.2	4.2	1.7	2.2	0.0019	17
0.7	**M2BA**	**80 M6 B**	1130	70.0	0.68	1.9	3.6	5.9	1.7	2.2	0.0024	18
0.9	**M2BA**	**90 S6 A**	1135	74.0	0.72	2.2	4.3	7.6	2.1	2.5	0.0039	21
1.3	**M2BA**	**90 L6 A**	1120	75.0	0.76	3	4.1	11.1	2.0	2.3	0.0049	24
1.8	**M2BA**	**100 L6 A**	1150	79.0	0.73	4.1	5.0	14.9	2.3	2.7	0.011	35
2.7	**M2BA**	**112 M6 A**	1150	83.0	0.77	5.5	5.7	22.5	2.2	2.7	0.017	44
3.7	**M2BA**	**132 S6 A**	1155	84.5	0.80	7.2	6.2	30.5	2.2	3.0	0.038	71
4.9	**M2BA**	**132 M6 A**	1155	85.0	0.78	9.7	6.5	40	2.6	3.3	0.049	78
6.7	**M2BA**	**132 M6 B**	1155	87.0	0.81	12.5	6.9	55	2.6	3.1	0.065	80
9.8	**M3BP**	**160 M**	1165	88.5	0.80	18.5	5.4	81	1.5	2.1	0.089	115
13	**M3BP**	**160 L**	1170	90.1	0.79	25	6.2	107	1.7	3.0	0.307	135
17.5	**M3BP**	**180 L**	1165	91.3	0.79	33	6.2	143	1.7	2.9	0.217	177
22	**M3BP**	**200 MLA**	1180	91.4	0.82	39	6.3	179	2.2	2.2	0.37	245
26	**M3BP**	**200 MLB**	1175	92.1	0.83	45	6.3	2111	2.5	2.7	0.43	260
35	**M3BP**	**225 SMB**	1185	93.1	0.83	61	6.8	282	2.7	2.5	0.64	320
43	**M3BP**	**250 SMA**	1185	93.8	0.84	73	6.6	347	2.6	2.5	1.16	415
55	**M3BP**	**280 SMA**	1187	94.3	0.84	92	6.0	442	2.0	2.1	1.85	605
63	**M3BP**	**280 SMB**	1188	94.6	0.84	104	6.6	506	2.3	2.3	2.2	645
86	**M3BP**	**315 SMA**	1191	95.1	0.84	142	7.1	690	2.1	2.5	3.2	830
105	**M3BP**	**315 SMB**	1191	95.4	0.85	171	6.9	842	2.1	2.5	4.1	930
125	**M3BP**	**315 SMC**	1190	95.7	0.84	205	7.1	1003	2.2	2.7	4.9	1000
150	**M3BP**	**315 MLA**	1190	95.9	0.84	246	7.2	1204	2.4	2.7	5.8	1150
195	**M3BP**	**355 SMA**	1191	96.1	0.84	320	6.1	1563	1.6	2.1	7.9	1520
230	**M3BP**	**355 SMB**	1192	96.2	0.85	370	6.6	1843	1.8	2.4	9.7	1680
300	**M3BP**	**355 SMC**	1191	96.5	0.85	480	6.7	2405	2.1	2.5	11.3	1820
360	**M3BP**	**355 MLB**	1191	96.4	0.84	585	6.7	2886	2.2	2.4	13.5	2180
400	**M3BP**	**355 LKA**	1191	96.6	0.84	645	7.4	3207	2.4	2.7	15.5	2500
440	**M3BP**	**355 LKB**	1191	96.5	0.84	712	7.2	3528	2.4	2.4	16.5	2600
450[1)]	**M3BP**	**400 LKA**	1192	96.7	0.84	730	6.7	3605	1.9	2.5	17	2900
450	**M3BP**	**400 LA**	1192	96.7	0.84	730	6.7	3605	1.9	2.5	17	2900
510	**M3BP**	**400 LB**	1193	96.8	0.84	830	6.9	4082	2.0	2.5	20.5	3150
510[1)]	**M3BP**	**400 LKB**	1193	96.8	0.84	830	6.9	4082	2.0	2.5	20.5	3150
560	**M3BP**	**400 LC**	1192	97.0	0.85	900	6.8	4486	2.1	2.5	22	3300
560[1)]	**M3BP**	**400 LKC**	1192	97.0	0.85	900	6.8	4486	2.1	2.5	22	3300
630	**M3BP**	**400 LD**	1192	97.1	0.86	995	7.0	5047	2.0	2.7	24	3400
630[1)]	**M3BP**	**400 LKD**	1192	97.1	0.86	995	7.0	5047	2.0	2.7	24	3400
710	**M3BP**	**450 LA**	1193	97.0	0.85	1130	5.9	5683	0.9	2.2	31	4150
800	**M3BP**	**450 LB**	1194	97.1	0.86	1260	6.4	6398	1.1	2.3	37	4500
900	**M3BP**	**450 LC**	1194	97.1	0.85	1430	6.6	7198	1.1	2.4	41	4800
1200 r/min = 6 poles			**440 V 60 Hz**					**High-output design**				
15.5	**M3BP**	**160 LB**	1165	91.0	0.77	30	6.9	127	2.2	2.9	0.127	148
19	**M3BP**	**180 LB**	1165	91.9	0.80	35	6.1	155	2.0	2.5	0.237	185
34	**M3BP**	**200 MLC**	1180	92.3	0.83	57	6.9	276	3.1	2.6	0.49	275
44	**M3BP**	**225 SMC**	1180	93.2	0.83	74	6.4	357	2.9	2.4	0.75	345
52	**M3BP**	**250 SMB**	1185	93.9	0.84	87	6.5	420	2.6	2.4	1.49	460
86	**M3BP**	**280 SMC**	1188	95.1	0.85	142	6.8	691	2.4	2.4	2.85	725
185	**M3BP**	**315 LKA**	1190	95.9	0.84	304	6.9	1485	2.2	2.5	7.3	1410
210	**M3BP**	**315 LKB**	1190	95.9	0.85	338	6.9	1685	2.3	2.5	8.3	1520
230	**M3BP**	**315 LKC**	1187	95.8	0.85	370	6.3	1850	2.2	2.4	9.2	1600

Marine cast iron motors

Technical data, Non-Essential/Essential Services

IP 55 - IC 411 - temperature rise 90 K

Output kW	Motor type		Product code		Speed r/min	Effi-ciency %	Power factor cos φ	Current I_N A	Current I_s / I_N	Torque T_N Nm	Torque T_s / T_N	Torque T_{max} / T_N
750 r/min = 8 poles					**380 V 50 Hz**				**Basic design**			
4	**M3BP**	**160 MA**	3GBP	164 101-••A	710	83.5	0.71	10.2	4.7	54	1.7	2.4
5.5	**M3BP**	**160 M**	3GBP	164 102-••A	705	84.0	0.72	13.8	5	74	2.1	2.3
7.5	**M3BP**	**160 L**	3GBP	164 103-••A	710	85.7	0.72	18.6	4.9	100	2.1	2.4
11	**M3BP**	**180 L**	3GBP	184 101-••A	715	89.0	0.77	24.5	5.3	147	2.0	2.3
15	**M3BP**	**200 MLA**	3GBP	204 001-••A	735	91.0	0.83	30	6.8	196	2.6	2.9
18.5	**M3BP**	**225 SMA**	3GBP	224 001-••A	730	91.0	0.79	39	6.2	242	2.5	2.8
22	**M3BP**	**225 SMB**	3GBP	224 002-••A	730	91.0	0.81	47	5.8	288	2.1	2.3
30	**M3BP**	**250 SMA**	3GBP	254 001-••A	735	92.6	0.81	61	6.7	390	2.0	2.3
37	**M3BP**	**280 SMA**	3GBP	284 210-••G	740	93.4	0.80	75	6.8	477	1.5	2.7
45	**M3BP**	**280 SMB**	3GBP	284 220-••G	740	93.9	0.80	91	7.1	581	1.6	2.8
55	**M3BP**	**315 SMA**	3GBP	314 210-••G	741	93.9	0.83	108	6.5	709	1.4	2.4
75	**M3BP**	**315 SMB**	3GBP	314 220-••G	740	94.3	0.83	147	6.6	969	1.5	2.4
90	**M3BP**	**315 SMC**	3GBP	314 230-••G	740	94.6	0.84	173	6.8	1163	1.6	2.4
110	**M3BP**	**315 MLA**	3GBP	314 410-••G	739	94.9	0.84	210	6.7	1421	1.6	2.4
132	**M3BP**	**355 SMA**	3GBP	354 210-••G	743	95.6	0.82	257	6.8	1697	1.3	2.3
160	**M3BP**	**355 SMB**	3GBP	354 220-••G	743	95.6	0.82	310	7	2056	1.4	2.4
200	**M3BP**	**355 SMC**	3GBP	354 230-••G	742	95.6	0.81	398	6.6	2574	1.4	2.3
250	**M3BP**	**355 MLB**	3GBP	354 420-••G	741	95.6	0.81	490	6.8	3222	1.4	2.4
300	**M3BP**	**355 LKB**	3GBP	354 820-••G	742	95.8	0.81	585	7.5	3861	1.6	2.6
315	**M3BP**	**400 LA**	3GBP	404 510-••G	743	96.3	0.82	608	6.3	4048	1.1	2.3
315[1)]	**M3BP**	**400 LKA**	3GBP	404 810-••G	743	96.3	0.82	608	6.3	4048	1.1	2.3
355[1)]	**M3BP**	**400 LKB**	3GBP	404 820-••G	742	96.4	0.84	665	6.1	4569	1.0	2.3
355	**M3BP**	**400 LB**	3GBP	404 520-••G	742	96.4	0.84	665	6.1	4569	1.0	2.3
400	**M3BP**	**400 LC**	3GBP	404 530-••G	743	96.5	0.83	765	6.7	5141	1.1	2.4
400[1)]	**M3BP**	**400 LKC**	3GBP	404 830-••G	743	96.5	0.83	765	6.7	5141	1.1	2.4
450	**M3BP**	**450 LA**	3GBP	454 510-••G	743	96.2	0.83	855	5.6	5784	0.9	2.0
500	**M3BP**	**450 LB**	3GBP	454 520-••G	744	96.3	0.83	950	5.7	6418	0.9	2.0
560	**M3BP**	**450 LC**	3GBP	454 530-••G	744	96.5	0.83	1060	5.8	7188	1.0	2.0
630	**M3BP**	**450 LD**	3GBP	454 540-••G	744	96.6	0.83	1190	6.3	8086	1.1	2.2
750 r/min = 8 poles					**380 V 50 Hz**				**High-output design**			
8.5	**M3BP**	**160 LB**	3GBP	164 104-••A	695	84.6	0.73	21.5	4.9	114	2.0	2.3
13.5	**M3BP**	**180 LB**	3GBP	184 102-••A	715	89.0	0.80	31	6.1	179	2.4	2.6
18.5	**M3BP**	**200 MLB**	3GBP	204 002-••A	735	91.2	0.83	37	6.6	241	2.3	2.8
30	**M3BP**	**225 SMC**	3GBP	224 003-••A	730	91.5	0.80	65	6.2	392	2.5	2.7
37	**M3BP**	**250 SMB**	3GBP	254 002-••A	735	92.5	0.82	77	6.8	479	2.6	2.8
55	**M3BP**	**280 SMC**	3GBP	284 230-••G	739	94.2	0.82	108	7.2	711	1.7	2.8
132	**M3BP**	**315 LKA**	3GBP	314 810-••G	739	95.0	0.84	251	6.6	1706	1.6	2.4
150	**M3BP**	**315 LKB**	3GBP	314 820-••G	739	95.2	0.84	287	7	1938	1.7	2.5
160	**M3BP**	**315 LKC**	3GBP	314 830-••G	739	95.2	0.84	305	7	2068	1.7	2.5

[1)] Size with alternative dimensions

The bullets in the product code indicate choice of mounting arrangement, voltage and frequency, generation code (see ordering information page).

Marine cast iron motors

Technical data, Non-Essential/Essential Services

IP 55 - IC 411 - temperature rise 90 K

Output kW	Motor type		Speed r/min	Effi-ciency %	Power factor cos φ	Current I_N / A	Current I_s / I_N	Torque T_N / Nm	Torque T_s / T_N	Torque T_{max} / T_N	Moment of inertia J=1/4 GD² kgm²	Weight kg
900 r/min = 8 poles			**440 V 60 Hz**					**Basic design**				
5.2	**M3BP**	**160 MA**	850	84.4	0.75	11.5	4.4	58	1.6	2.1	0.072	100
6.4	**M3BP**	**160 M**	855	84.9	0.72	13.8	4.8	71	1.8	2.3	0.091	113
8.6	**M3BP**	**160 L**	855	85.7	0.73	18.5	4.9	96	2.0	2.4	0.131	126
13.5	**M3BP**	**180 L**	865	89.7	0.80	25.5	5.0	149	1.7	2.1	0.224	177
18	**M3BP**	**200 MLA**	885	91.0	0.84	32	6.6	196	2.3	2.7	0.45	250
21	**M3BP**	**225 SMA**	880	91.0	0.79	39	6.5	227	2.3	3.0	0.61	305
25	**M3BP**	**225 SMB**	880	91.4	0.81	45	5.8	271	2.0	2.3	0.68	320
34	**M3BP**	**250 SMA**	885	92.8	0.81	61	6.8	367	1.9	2.3	1.25	415
43	**M3BP**	**280 SMA**	890	93.8	0.81	75	6.7	461	1.4	2.6	1.85	605
55	**M3BP**	**280 SMB**	890	94.2	0.82	94	6.8	590	1.4	2.6	2.2	645
63	**M3BP**	**315 SMA**	890	94.1	0.83	107	6.5	676	1.4	2.4	3.2	830
85	**M3BP**	**315 SMB**	890	94.6	0.84	141	6.6	912	1.4	2.4	4.1	930
105	**M3BP**	**315 SMC**	890	94.8	0.84	172	6.7	1127	1.5	2.3	4.9	1000
125	**M3BP**	**315 MLA**	889	95.1	0.84	205	6.8	1343	1.5	2.4	5.8	1150
155	**M3BP**	**355 SMA**	893	95.8	0.82	260	6.5	1657	1.1	2.3	7.9	1520
185	**M3BP**	**355 SMB**	893	95.7	0.82	312	6.8	1978	1.2	2.3	9.7	1680
230	**M3BP**	**355 SMC**	892	95.9	0.81	385	6.7	2462	1.3	2.3	11.3	1820
285	**M3BP**	**355 MLB**	891	96.0	0.81	486	6.7	3054	1.3	2.4	13.5	2180
330	**M3BP**	**355 LKB**	892	96.1	0.81	560	7.7	3533	1.4	2.6	16.5	2600
360	**M3BP**	**400 LA**	893	96.5	0.82	600	6.3	3850	1.0	2.3	17	2900
360	**M3BP**	**400 LKA**	893	96.5	0.82	600	6.3	3850	1.0	2.3	17	2900
400[1)]	**M3BP**	**400 LKB**	892	96.6	0.84	648	6.1	4282	1.0	2.3	21	3200
400	**M3BP**	**400 LB**	892	96.6	0.84	648	6.1	4282	1.0	2.3	21	3200
450	**M3BP**	**400 LC**	893	96.6	0.83	735	6.7	4812	1.1	2.3	24	3400
450[1)]	**M3BP**	**400 LKC**	893	96.6	0.83	735	6.7	4812	1.1	2.3	24	3400
500	**M3BP**	**450 LA**	894	96.4	0.83	820	5.7	5341	0.9	2.0	26	3750
560	**M3BP**	**450 LB**	894	96.5	0.83	915	5.8	5982	0.9	2.0	29	4000
630	**M3BP**	**450 LC**	894	96.6	0.84	1020	5.9	6729	0.9	2.0	35	4350
710	**M3BP**	**450 LD**	894	96.7	0.84	1145	6.3	7584	1.0	2.2	41	4800
900 r/min = 8 poles			**440 V 60 Hz**					**High-output design**				
9.8	**M3BP**	**160 LB**	845	86.6	0.73	21.5	4.9	109	1.9	2.3	0.131	128
15.5	**M3BP**	**180 LB**	865	90.2	0.80	30	6.1	170	2.3	2.6	0.24	185
21	**M3BP**	**200 MLB**	885	91.6	0.83	37	6.8	227	2.2	2.8	0.54	275
34	**M3BP**	**225 SMC**	880	92.2	0.80	63	6.3	368	2.3	2.7	0.8	345
42	**M3BP**	**250 SMB**	885	93.1	0.82	74	6.8	452	2.4	2.8	1.52	460
65	**M3BP**	**280 SMC**	889	94.5	0.82	110	7.0	698	1.5	2.7	2.85	725
150	**M3BP**	**315 LKA**	889	95.2	0.84	246	6.7	1611	1.5	2.4	7.3	1410
173	**M3BP**	**315 LKB**	889	95.3	0.84	285	6.9	1858	1.6	2.5	8.3	1520
185	**M3BP**	**315 LKC**	889	95.4	0.84	305	6.9	1987	1.6	2.5	9.2	1600

Marine cast iron motors, two speed

Technical data, Non-Essential/Essential Services

IP 55 - IC 411 - temperature rise 90 K

Output kW	Motor type	Product code	Speed r/min	Effi-ciency %	Power factor cos φ	Current I_N A	Current I_s / I_N	Torque T_N Nm	Torque T_s / T_N	Torque T_{max} / T_N
3000/1500 r/min =2/4 poles			**380 V 50 Hz**		**Fan drive, two separate windings**					
11.4/1.7	**M3BP 160 M**	3GBP 168 352-••A	2940/1470	88.8/77.3	0.90/0.75	22/4.5	8.5/5.8	37/11	2.3/2.0	3.2/2.4
15.3/2.2	**M3BP 160 L**	3GBP 168 353-••A	2940/1480	89.5/78.4	0.91/0.66	28/6.5	8.1/7.2	50/14	2.3/3.0	3.0/3.4
17.5/2.5	**M3BP 180 M**	3GBP 188 357-••A	2935/1465	88.6/76.5	0.91/0.78	33/6.5	6.7/5.5	57/16	2.0/1.9	2.4/1.9
22/3.2	**M3BP 180 L**	3GBP 188 358-••A	2940/1465	90.5/77.1	0.91/0.80	41/8	8.1/4.5	71/21	2.7/1.8	3.0/1.8
26/3.6	**M3BP 200 MLA**	3GBP 208 210-••A	2945/1480	91.5/85.0	0.89/0.72	49/9.2	8.3/7.3	84/23	2.3/2.7	2.9/2.8
33/4.8	**M3BP 200 MLB**	3GBP 208 211-••A	2945/1480	92.5/86.5	0.91/0.74	61/11.9	8.0/7.0	107/31	2.3/2.7	2.7/2.7
38/5.3	**M3BP 225 SMB**	3GBP 228 207-••A	2950/1475	92.5/86.5	0.90/0.78	70/12.1	7.3/5.9	123/34	2.3/2.8	2.4/2.1
44/6.2	**M3BP 225 SMC**	3GBP 228 208-••A	2955/1480	93.0/87.5	0.91/0.78	80/14	7.5/6.2	142/40	2.5/2.9	2.5/2.1
62/8.8	**M3BP 250 SMB**	3GBP 258 204-••A	2965/1485	94.0/89.5	0.90/0.76	111/20	9.5/7.3	200/57	2.3/2.6	3.2/2.3
84/12	**M3BP 280 SMB**	3GBP 288 221-••G	2977/1490	94.5/91.0	0.89/0.76	153/27	7.2/6.6	269/77	1.9/2.7	2.7/2.6
100/15	**M3BP 280 SMC**	3GBP 288 231-••G	2980/1490	95.0/91.4	0.89/0.78	182/32	9.5/6.9	320/96	2.6/2.8	3.6/2.5
115/17	**M3BP 315 SMB**	3GBP 318 221-••G	2975/1490	95.0/91.5	0.89/0.77	207/37	6.5/6.4	369/109	1.7/2.8	2.6/3.0
135/20	**M3BP 315 SMC**	3GBP 318 231-••G	2974/1487	95.2/91.7	0.90/0.78	240/42.5	6.5/5.7	433/128	1.8/2.3	2.5/2.6
170/24	**M3BP 315 MLA**	3GBP 318 411-••G	2980/1488	95.9/92.5	0.90/0.79	300/50	7.5/5.6	545/154	2.3/2.5	2.9/2.6
3000/1500 r/min =2-4 poles			**380 V 50 Hz**		**Fan drive, Dahlander-connection**					
8.8/1.8	**M3BP 160 MA**	3GBP 168 301-••A	2915/1465	84.0/81.6	0.90/0.71	18/5	5.8/5.5	29/12	1.4/2.0	2.2/2.3
14/2.8	**M3BP 160 M**	3GBP 168 302-••A	2920/1465	86.4/84.1	0.92/0.74	27/7	6.2/5.6	46/18	1.6/2.1	2.2/2.4
17/4	**M3BP 160 L**	3GBP 168 303-••A	2930/1465	88.6/86.4	0.91/0.74	32.5/9.5	7.5/5.7	55/26	2.1/2.2	2.8/2.5
18.9/4.1	**M3BP 180 M**	3GBP 188 305-••A	2935/1470	88.9/87.1	0.92/0.76	35.5/9.5	6.9/5.5	62/27	2.0/2.1	2.5/2.3
22.8/4.6	**M3BP 180 L**	3GBP 188 306-••A	2940/1470	89.8/88.1	0.92/0.75	42/10.5	7.5/5.9	74/30	2.1/2.2	2.6/2.5
28/7	**M3BP 200 MLA**	3GBP 208 110-••A	2940/1465	90.0/89.0	0.89/0.85	53/15	7.3/6.4	91/46	2.1/2.1	2.6/2.3
34/8.8	**M3BP 200 MLB**	3GBP 208 111-••A	2950/1475	91.5/91.0	0.89/0.85	63/18	7.7/6.4	110/57	2.1/2.1	2.7/2.4
37/9.7	**M3BP 200 MLC**	3GBP 208 112-••A	2950/1470	92.5/91.0	0.89/0.77	70/21	7.9/5.7	120/63	2.3/2.1	3.1/2.5
40/11.4	**M3BP 225 SMB**	3GBP 228 107-••A	2955/1475	93.0/91.5	0.92/0.82	71/23	7.5/5.5	129/74	2.0/2.1	2.6/2.2
48/13.2	**M3BP 225 SMC**	3GBP 228 108-••A	2955/1475	93.5/92.5	0.91/0.82	86/27	7.5/5.5	155/85	2.1/2.0	2.7/2.3
66/22	**M3BP 250 SMB**	3GBP 258 104-••A	2965/1475	94.5/93.0	0.92/0.82	116/44	9.1/5.6	213/142	2.4/2.1	3.2/2.3
90/30	**M3BP 280 SMB**	3GBP 288 228-••G	2960/1480	93.2/93.0	0.92/0.85	159/58	6.6/5.2	290/194	1.3/1.5	2.7/1.9
100/31	**M3BP 280 SMC**	3GBP 288 238-••G	2968/1478	93.4/93.0	0.94/0.85	173/60	7.9/4.9	322/200	1.7/1.6	2.9/1.8
115/25	**M3BP 315 SMB**	3GBP 318 228-••G	2970/1489	94.8/94.0	0.89/0.75	207/54	6.6/5.2	370/160	1.3/1.6	2.6/1.8
155/38	**M3BP 315 MLA**	3GBP 318 418-••G	2970/1484	95.3/94.8	0.89/0.77	280/80	7.2/5.5	498/244	1.7/1.8	2.7/2.5

4

Data for other sizes on request.

The bullets in the product code indicate choice of mounting arrangement, voltage and frequency, generation code

(see ordering information page).

Marine cast iron motors, two speed

Technical data, Non-Essential/Essential Services

IP 55 - IC 411 - temperature rise 90 K

Output kW	Motor type	Speed r/min	Effi-ciency %	Power factor cos φ	Current I_N / A	Current I_s / I_N	Torque T_N / Nm	Torque T_s / T_N	Torque T_{max} / T_N	Moment of inertia J=1/4 GD² kgm²	Weight kg
3600/1800 r/min =2/4 poles			**440 V 60 Hz**		**Fan drive, two separate windings**						
13.1/2	**M3BP 160 M**	3540/1770	88.8/77.3	0.90/0.75	22/4.5	8.5/5.8	35/11	2.3/1.8	3.1/2.3	0.054	133
17.6/2.5	**M3BP 160 L**	3540/1780	89.5/78.4	0.91/0.66	28/6.5	8.1/7.2	48/13	2.1/2.7	2.9/3.4	0.057	140
20.1/2.9	**M3BP 180 M**	3535/1765	88.6/76.5	0.91/0.78	33/6.5	6.7/5.5	54/16	1.8/1.7	2.4/1.9	0.094	194
25.3/3.7	**M3BP 180 L**	3540/1765	90.5/77.1	0.91/0.80	41/8	8.1/4.5	68/20	2.4/1.6	2.9/1.8	0.108	200
30/4.2	**M3BP 200 MLA**	3545/1780	91.5/85.0	0.89/0.72	49/9.2	8.3/7.3	81/23	2.1/2.4	2.8/2.7	0.15	250
38/5.6	**M3BP 200 MLB**	3545/1780	92.5/86.5	0.91/0.74	61/11.9	8.0/7.0	102/30	2.1/2.4	2.6/2.6	0.19	270
44/6.1	**M3BP 225 SMB**	3550/1775	92.5/86.5	0.90/0.78	70/12.1	7.3/5.9	118/33	2.1/2.5	2.3/2.0	0.26	335
51/7.2	**M3BP 225 SMC**	3555/1780	93.0/87.5	0.91/0.78	80/14	7.5/6.2	137/39	2.2/2.6	2.4/2.0	0.29	355
72/10.2	**M3BP 250 SMB**	3565/1785	94.0/89.5	0.90/0.76	111/20	9.5/7.3	193/55	2.1/2.3	3.1/2.3	0.57	465
100/15	**M3BP 280 SMB**	3575/1790	94.2/90.5	0.89/0.78	157/28	7.0/7.1	267/80	1.7/1.7	2.6/2.5	0.9	665
115/18.5	**M3BP 280 SMC**	3580/1790	94.8/91.2	0.89/0.79	179/34	9.7/6.8	307/99	2.4/2.6	3.6/2.4	1.15	725
132/20	**M3BP 315 SMB**	3575/1790	94.8/91.3	0.89/0.77	205/36.5	6.5/6.4	353/107	2.5/2.5	2.6/3.0	1.4	940
155/23	**M3BP 315 SMC**	3574/1787	95.9/91.5	0.90/0.78	238/42	6.5/5.7	414/123	1.6/2.0	2.5/2.6	1.7	1025
195/28	**M3BP 315 MLA**	3580/1788	95.7/92.3	0.90/0.79	296/50	7.6/5.6	520/150	2.1/2.3	2.9/2.6	2.1	1190
3600/1800 r/min =2-4 poles			**440 V 60 Hz**		**Fan drive, Dahlander-connection**						
10.1/2.1	**M3BP 160 MA**	3515/1765	84.4/81.6	0.90/0.71	18/5	5.8/5.5	27/11	1.3/1.8	2.2/2.5	0.039	118
16.1/3.2	**M3BP 160 M**	3520/1765	86.4/84.1	0.92/0.74	27/7	6.2/5.6	44/17	1.4/1.9	2.2/2.4	0.054	133
19.6/4.6	**M3BP 160 L**	3530/1765	88.6/86.4	0.91/0.74	32.5/9.5	7.5/5.7	53/25	1.9/2.0	2.7/2.5	0.057	140
21.7/4.7	**M3BP 180 M**	3535/1770	88.9/87.1	0.92/0.76	35.5/9.5	6.9/5.5	59/25	1.8/1.9	2.5/2.3	0.094	194
26.2/5.3	**M3BP 180 L**	3540/1770	89.8/88.1	0.92/0.75	42/10.5	7.5/5.9	71/29	1.9/2	2.6/2.5	0.108	200
32/8.1	**M3BP 200 MLA**	3540/1765	90.0/89.0	0.89/0.85	53/15	7.3/6.4	86/44	1.9/1.9	2.6/2.3	0.29	255
39/10.2	**M3BP 200 MLB**	3550/1775	91.5/91.0	0.89/0.85	63/18	7.7/6.4	105/55	1.9/1.9	2.7/2.3	0.34	275
43/11.2	**M3BP 200 MLC**	3550/1770	92.5/91.0	0.89/0.77	69/21	7.9/5.7	116/60	2.0/1.9	3.0/2.5	0.19	280
46/13.2	**M3BP 225 SMB**	3555/1775	93.0/91.5	0.92/0.82	71/23	7.5/5.5	124/71	1.8/1.9	2.5/2.2	0.26	335
56/15.3	**M3BP 225 SMC**	3555/1775	93.5/92.5	0.91/0.82	86/27	7.6/5.5	148/82	1.9/1.8	2.7/2.2	0.29	355
76/25	**M3BP 250 SMB**	3565/1775	94.5/93.0	0.92/0.92	116/44	9.1/5.6	204/135	2.2/1.9	3.1/2.3	0.57	465
105/35	**M3BP 280 SMB**	3560/1780	92.9/93.4	0.92/0.85	160/58	6.5/5.2	282/188	1.2/1.4	2.7/1.9	1.5	665
115/36	**M3BP 280 SMC**	3568/1777	93.0/93.0	0.94/0.84	173/60	7.8/4.9	308/193	1.5/1.4	2.9/1.8	1.85	725
132/28	**M3BP 315 SMB**	3570/1789	94.6/94.2	0.89/0.75	205/52	6.6/5.4	353/149	1.2/1.5	2.6/1.8	1.4	940
178/44	**M3BP 315 MLA**	3570/1784	95.1/94.6	0.89/0.77	285/83	7.2/5.5	476/235	1.5/1.6	2.7/2.5	2.1	1190

Marine cast iron motors, two speed

Technical data, Non-Essential/Essential Services

IP 55 - IC 411 - temperature rise 90 K

Output kW	Motor type	Product code	Speed r/min	Effi-ciency %	Power factor cos φ	Current I_N A	Current I_s / I_N	Torque T_N Nm	Torque T_s / T_N	Torque T_{max} / T_N
1500/1000 r/min =4/6 poles			**380 V 50 Hz**		**Fan drive, two separate windings**					
9.2/3.1	**M3BP 160 M**	3GBP 168 354-••A	1460/970	86.6/74.0	0.83/0.76	19.5/8.5	6.5/4.0	60/31	2.0/1.2	2.5/1.7
12.7/4	**M3BP 160 L**	3GBP 168 355-••A	1460/970	88.1/75.7	0.83/0.74	26.5/11	7.1/4.5	83/39	2.3/1.4	2.7/1.9
14/4.4	**M3BP 180 M**	3GBP 188 359-••A	1470/980	88.7/76.5	0.83/0.72	29/12	6.5/4.5	91/43	1.9/1.3	2.5/2.0
17.6/5.7	**M3BP 180 L**	3GBP 188 360-••A	1470/980	89.7/78.5	0.83/0.73	36/15	6.8/4.5	114/56	2.0/1.3	2.6/1.9
20/6.3	**M3BP 200 MLA**	3GBP 208 213-••A	1475/985	89.5/84.0	0.88/0.87	39/13.8	8.0/8.0	129/61	1.7/2.0	2.9/3.0
26/7.9	**M3BP 200 MLB**	3GBP 208 214-••A	1470/985	90.0/83.5	0.90/0.89	49/16.6	8.0/6.9	169/77	1.7/1.2	2.8/2.2
31/11	**M3BP 225 SMB**	3GBP 228 209-••A	1470/985	91.0/85.0	0.91/0.89	58/22	7.6/6.0	201/107	1.5/1.2	2.7/2.1
37/12.3	**M3BP 225 SMC**	3GBP 228 210-••A	1475/985	91.5/89.0	0.89/0.89	70/25	8.6/7.0	240/119	1.7/1.4	3.1/2.4
55/16.3	**M3BP 250 SMB**	3GBP 258 205-••A	1475/985	93.5/87.0	0.89/0.79	101/37	7.8/7.5	356/158	2.5/3.1	2.8/2.7
85/27	**M3BP 280 SMB**	3GBP 288 224-••G	1486/990	94.3/90.0	0.85/0.77	163/61	7.5/7.6	546/260	2.4/2.3	2.8/2.8
95/29	**M3BP 280 SMC**	3GBP 288 234-••G	1485/989	94.6/89.5	0.87/0.80	176/62	7.6/7.0	611/280	2.4/2.9	2.7/2.5
120/36	**M3BP 315 SMB**	3GBP 318 224-••G	1489/992	95.5/91.7	0.84/0.76	227/80	7.1/6.8	770/347	2.0/2.9	2.7/2.9
130/39	**M3BP 315 SMC**	3GBP 318 234-••G	1487/991	95.2/91.9	0.86/0.78	242/83	6.2/6.0	835/376	1.8/2.4	2.3/2.5
150/45	**M3BP 315 MLA**	3GBP 318 414-••G	1485/989	95.4/91.0	0.86/0.78	278/96	6.2/5.2	965/434	1.9/2.1	2.6/2.2
200/60	**M3BP 315 LKA**	3GBP 318 814-••G	1485/991	95.0/91.5	0.87/0.80	372/126	6.1/5.9	1286/579	1.9/2.4	2.4/2.4
235/73	**M3BP 315 LKB**	3GBP 318 824-••G	1489/991	95.6/92.5	0.86/0.78	436/155	7.4/6.8	1508/703	2.3/3.0	2.9/2.8
285/86	**M3BP 355 SMC**	3GBP 358 234-••G	1487/991	95.9/93.7	0.86/0.77	527/182	6.0/6.6	1830/829	1.6/2.6	2.3/2.3
370/105	**M3BP 355 MLB**	3GBP 358 424-••G	1490/991	96.3/94.1	0.86/0.77	685/223	7.2/6.7	2371/1012	2.0/2.7	2.7/2.3
1500/750 r/min =4/8 poles			**380 V 50 Hz**		**Fan drive, two separate windings**					
7.8/1.2	**M3BP 160 M**	3GBP 168 356-••A	1460/735	86.0/64.0	0.83/0.52	17/5.5	6.5/3.9	51/16	2.0/2.3	2.5/2.6
11.4/1.6	**M3BP 160 L**	3GBP 168 357-••A	1460/735	87.3/59.0	0.84/0.51	24/8	6.4/3.9	75/21	2.0/1.9	2.4/2.7
14/2	**M3BP 180 M**	3GBP 188 361-••A	1475/740	89.3/63.6	0.82/0.51	30/9.5	7.2/4.0	92/26	2.2/1.8	2.8/2.7
16.7/2.4	**M3BP 180 L**	3GBP 188 362-••A	1475/740	90.1/67.5	0.83/0.52	35/10	7.3/3.9	108/31	2.3/1.7	2.8/2.5
23/2.9	**M3BP 200 MLA**	3GBP 208 216-••A	1475/740	91.0/73.0	0.85/0.59	46/10.2	7.0/4.7	149/37	2.1/2.4	2.5/2.6
26/3.3	**M3BP 200 MLB**	3GBP 208 217-••A	1470/740	91.5/75.5	0.86/0.59	50/11.4	7.0/4.8	169/43	2.2/2.3	2.5/2.3
33/4.6	**M3BP 225 SMB**	3GBP 228 211-••A	1480/740	91.5/80.5	0.84/0.63	66/14	7.6/5.3	213/59	2.2/2.3	2.7/2.0
40/6.2	**M3BP 225 SMC**	3GBP 228 212-••A	1480/740	92.5/82.0	0.86/0.66	78/17.7	8.0/5.0	258/80	2.4/2.1	2.8/2.1
55/8.8	**M3BP 250 SMB**	3GBP 258 206-••A	1475/740	93.5/83.0	0.89/0.65	101/25	7.8/6.2	356/114	2.5/3.1	2.8/2.8
85/12	**M3BP 280 SMB**	3GBP 288 222-••G	1486/743	94.3/85.5	0.85/0.64	163/34	7.5/4.9	546/154	2.4/3.0	2.8/2.2
95/15	**M3BP 280 SMC**	3GBP 288 232-••G	1485/743	94.6/86.5	0.87/0.63	176/42	7.6/5.3	611/193	2.4/2.4	2.7/2.3
120/16	**M3BP 315 SMB**	3GBP 318 222-••G	1489/740	95.5/87.5	0.84/0.71	227/40	7.1/4.0	770/206	2.0/1.5	2.7/2.0
130/17	**M3BP 315 SMC**	3GBP 318 232-••G	1487/743	95.2/87.0	0.86/0.66	242/46	6.2/4.5	835/218	1.8/2.0	2.7/2.4
150/20	**M3BP 315 MLA**	3GBP 318 412-••G	1485/741	95.4/87.9	0.86/0.68	278/53	6.2/4.2	965/258	1.9/1.8	2.6/2.2
200/27	**M3BP 315 LKA**	3GBP 318 812-••G	1485/743	95.0/88.5	0.87/0.66	372/70	6.1/4.6	1286/347	1.9/2.3	2.4/2.0
235/32	**M3BP 315 LKB**	3GBP 318 822-••G	1489/743	95.6/89.5	0.86/0.66	436/83	7.4/4.6	1508/411	2.3/2.3	2.9/2.0
285/38	**M3BP 355 SMC**	3GBP 358 232-••G	1487/744	95.9/92.0	0.86/0.64	527/98	6.0/5.6	1830/488	1.6/2.0	2.3/2.1
370/50	**M3BP 355 MLB**	3GBP 358 422-••G	1490/743	96.3/92.0	0.86/0.65	685/126	7.2/5.4	2371/643	2.0/1.9	2.7/1.9

Data for other sizes on request.

The bullets in the product code indicate choice of mounting arrangement, voltage and frequency, generation code

(see ordering information page).

Marine cast iron motors, two speed

Technical data, Non-Essential/Essential Services

IP 55 - IC 411 - temperature rise 90 K

Output kW	Motor type	Speed r/min	Effi-ciency %	Power factor cos φ	Current I_N / A	Current I_s / I_N	Torque T_N / Nm	Torque T_s / T_N	Torque T_{max} / T_N	Moment of inertia J=1/4 GD² kgm²	Weight kg
1800/1200 r/min =4/6 poles			**440 V 60 Hz**		**Fan drive, two separate windings**						
10.5/3.6	**M3BP 160 M**	1760/1170	86.6/74.0	0.83/0.76	19.5/8.5	6.5/4.0	57/29	1.8/1.1	2.5/1.7	0.089	127
14.6/4.6	**M3BP 160 L**	1760/1170	88.1/75.7	0.83/0.74	26.5/11	7.1/4.5	79/38	2.1/1.3	2.7/1.9	0.119	148
16.1/5.1	**M3BP 180 M**	1770/1180	88.8/76.5	0.83/0.72	29/12	6.5/4.5	87/41	1.7/1.2	2.5/1.9	0.176	194
20.2/6.6	**M3BP 180 L**	1770/1180	89.7/78.5	0.83/0.73	36/15	6.8/4.5	109/53	1.8/1.2	2.6/1.9	0.224	207
23/7	**M3BP 200 MLA**	1775/1185	89.5/84.0	0.88/0.87	39/13.8	8.0/8.1	124/56	1.5/1.9	2.8/3.0	0.45	250
30/9	**M3BP 200 MLB**	1770/1185	90.0/83.5	0.90/0.89	49/16.6	8.0/6.9	162/73	1.5/1.1	2.7/2.2	0.54	275
36/13	**M3BP 225 SMB**	1770/1185	91.0/85.0	0.91/0.89	58/22	7.6/6.1	194/105	1.3/1.1	2.6/2.0	0.68	320
43/14	**M3BP 225 SMC**	1775/1185	91.5/89.0	0.89/0.89	69/25	8.6/7.0	231/113	1.6/1.3	3.0/2.4	0.8	345
64/19	**M3BP 250 SMB**	1775/1185	93.5/87.0	0.89/0.79	101/37	7.8/7.5	344/153	2.2/2.7	2.7/2.6	0.88	465
98/33	**M3BP 280 SMB**	1785/1190	94.5/90.0	0.85/0.77	161/62	7.7/8.0	524/265	2.3/3.0	2.9/2.7	1.5	665
110/35	**M3BP 280 SMC**	1785/1188	94.7/90.4	0.87/0.80	176/64	7.8/7.3	588/281	2.3/2.9	2.7/2.5	1.85	725
138/41	**M3BP 315 SMB**	1789/1192	95.3/92.0	0.84/0.76	230/79	7.1/7.2	737/328	1.9/3.0	2.7/3.0	2.6	960
150/45	**M3BP 315 SMC**	1787/1191	95.3/92.3	0.86/0.78	242/82	6.3/6.5	802/361	1.6/2.5	2.3/2.6	2.9	1000
165/50	**M3BP 315 MLA**	1786/1188	95.3/92.0	0.86/0.78	267/90	6.6/6.0	882/402	2.0/2.4	2.8/2.4	3.5	1160
230/69	**M3BP 315 LKA**	1785/1189	95.0/91.7	0.87/0.80	365/125	6.3/6.3	1230/554	1.8/2.6	2.5/2.5	4.4	1410
270/84	**M3BP 315 LKB**	1787/1191	95.5/92.6	0.86/0.78	435/155	7.7/7.2	1443/673	2.2/3.1	3.0/2.9	5	1520
325/100	**M3BP 355 SMC**	1787/1190	95.9/93.9	0.86/0.77	520/182	6.1/6.8	1737/802	1.5/2.5	2.3/2.3	7.2	1820
430/120	**M3BP 355 MLB**	1789/1191	96.2/94.3	0.86/0.77	685/220	7.3/7.1	2295/962	1.8/2.6	2.6/2.3	8.4	2140
1800/900 r/min =4/8 poles			**440 V 60 Hz**		**Fan drive, two separate windings**						
9/1.4	**M3BP 160 M**	1760/885	86.0/64.0	0.83/0.52	17/5.5	6.5/3.9	51/15	1.7/2.0	2.3/2.5	0.089	127
13.1/1.8	**M3BP 160 L**	1760/885	87.3/59.0	0.84/0.51	24/8	6.4/3.9	71/19	1.8/1.7	2.4/2.7	0.119	148
16.1/2.3	**M3BP 180 M**	1775/890	89.3/63.6	0.82/0.51	30/9.5	7.2/4.0	87/25	2.0/1.6	2.8/2.7	0.176	194
19.2/2.8	**M3BP 180 L**	1775/890	90.1/67.5	0.83/0.52	35/10	7.3/3.9	103/30	2.1/1.5	2.8/2.4	0.224	207
27/3.4	**M3BP 200 MLA**	1775/890	91.0/73.0	0.85/0.59	46/10.2	7.0/4.7	143/36	1.9/2.2	2.5/2.5	0.28	255
30/3.8	**M3BP 200 MLB**	1770/890	91.5/75.5	0.86/0.59	50/11.4	7.0/4.8	162/41	2.0/2.0	2.4/2.2	0.34	275
38/5.3	**M3BP 225 SMB**	1780/890	91.5/80.5	0.84/0.63	66/14	7.6/5.3	205/57	1.9/2.1	2.6/2.3	0.41	330
46/7.2	**M3BP 225 SMC**	1780/890	92.5/82.0	0.86/0.66	78/17.7	8.0/5.0	248/77	2.1/1.9	2.7/2.1	0.49	355
64/10.2	**M3BP 250 SMB**	1775/890	93.5/83.0	0.89/0.65	101/25	7.8/6.2	342/109	2.2/2.7	2.7/2.7	0.89	465
98/14	**M3BP 280 SMB**	1785/893	94.5/86.5	0.85/0.64	161/34	7.7/5.3	524/150	2.3/3.1	2.9/2.9	1.5	665
110/17	**M3BP 280 SMC**	1785/893	94.7/87.5	0.87/0.64	176/40	7.8/6.5	588/182	2.3/2.4	2.7/2.7	1.85	725
138/18	**M3BP 315 SMB**	1789/890	95.3/86.0	0.84/0.70	230/39	7.1/4.2	737/193	1.9/1.6	2.7/2.1	2.6	960
150/20	**M3BP 315 SMC**	1786/893	95.3/87.6	0.86/0.66	242/46	6.3/4.7	802/214	1.6/2.0	2.3/2.5	2.9	1000
165/21	**M3BP 315 MLA**	1786/892	95.3/88.0	0.86/0.66	267/50	6.6/4.6	882/225	2.0/2.0	2.8/2.6	3.5	1160
230/31	**M3BP 315 LKA**	1785/892	95.0/88.5	0.87/0.66	365/70	6.3/4.9	1230/332	1.8/2.4	2.5/2.0	4.4	1410
270/37	**M3BP 315 LKB**	1787/892	95.5/90.0	0.86/0.66	435/82	7.7/4.9	1443/396	2.2/2.4	3.0/2.0	5	1520
325/44	**M3BP 355 SMC**	1787/894	95.9/92.0	0.86/0.64	520/98	6.1/5.8	1737/470	1.5/2	2.3/2.1	7.2	1820
430/57	**M3BP 355 MLB**	1789/893	96.2/92.5	0.86/0.65	685/125	7.3/5.7	2295/610	1.8/1.9	2.6/1.9	8.4	2140

Marine cast iron motors, two speed

Technical data, Non-Essential/Essential Services

IP 55 - IC 411 - temperature rise 90 K

Output kW	Motor type	Product code	Speed r/min	Effi-ciency %	Power factor cos φ	Current I_N A	Current I_s / I_N	Torque T_N Nm	Torque T_s / T_N	Torque T_{max} / T_N
1500/750 r/min =4-8 poles			**380 V 50 Hz**		**Fan drive, Dahlander-connection**					
9.2/2	**M3BP 160 M**	3GBP 168 304-••A	1460/730	87.4/76.2	0.82/0.53	19.5/7.5	7.1/3.6	60/26	2.2/1.4	2.8/2.2
13.6/2.4	**M3BP 160 L**	3GBP 168 305-••A	1460/730	88.1/76.8	0.84/0.49	28.5/9.5	7.0/3.8	89/31	2.2/1.7	2.7/2.5
14.9/3	**M3BP 180 M**	3GBP 188 307-••A	1470/735	88.8/78.7	0.85/0.55	30.5/10.5	6.5/3.4	97/39	1.7/1.2	2.3/1.9
19.3/3.9	**M3BP 180 L**	3GBP 188 308-••A	1475/735	90.1/80.0	0.84/0.52	39/14.5	7.1/3.7	125/51	2.2/1.4	2.7/2.2
26/5.7	**M3BP 200 MLA**	3GBP 208 116-••A	1470/730	90.5/86.0	0.86/0.64	51/15.7	6.9/4.3	169/75	2.2/1.9	2.4/1.9
29/7	**M3BP 200 MLB**	3GBP 208 117-••A	1475/730	91.5/86.5	0.86/0.64	56/19.3	8.0/4.3	188/92	2.7/2.0	2.7/1.9
37/8.8	**M3BP 225 SMB**	3GBP 228 111-••A	1480/740	92.0/89.5	0.78/0.61	79/25	8.0/5.1	239/114	2.6/2.3	3.1/2.4
44/9.7	**M3BP 225 SMC**	3GBP 228 112-••A	1465/735	92.5/89.5	0.87/0.65	84/26	7.5/4.8	287/126	2.3/2.7	2.5/2.0
53/13.2	**M3BP 250 SMB**	3GBP 258 106-••A	1475/735	93.0/90.0	0.86/0.70	97/31	8.1/4.8	343/171	2.7/2.2	2.8/2.1
76/18.5	**M3BP 280 SMB**	3GBP 288 229-••G	1485/741	94.0/91.4	0.86/0.65	143/47	7.9/4.9	489/238	2.9/2.5	2.9/2.1
85/20	**M3BP 280 SMC**	3GBP 288 239-••G	1484/741	94.2/91.7	0.87/0.65	158/51	8.1/4.8	547/258	3.1/2.5	3.0/2.1
100/23	**M3BP 315 SMB**	3GBP 318 229-••G	1485/742	94.3/92.7	0.87/0.68	185/55	6.5/4.6	643/296	1.6/1.8	2.4/2.3
145/33	**M3BP 315 MLA**	3GBP 318 419-••G	1486/742	95.0/93.3	0.87/0.67	267/80	7.5/5.0	932/425	2.3/2.2	2.7/2.4
190/45	**M3BP 315 LKA**	3GBP 318 819-••G	1486/742	94.8/92.5	0.87/0.62	350/118	7.0/3.9	1222/579	2.6/2.0	2.9/2.0
250/65	**M3BP 315 LKC**	3GBP 318 839-••G	1488/742	95.3/93.0	0.86/0.62	466/170	8.0/4.0	1604/837	3.2/2.0	3.3/2.0
285/67	**M3BP 355 SMC**	3GBP 358 239-••G	1489/744	95.9/94.5	0.85/0.61	535/176	7.9/4.7	1828/860	2.4/1.7	3.0/2.0
3000/1500 r/min =2/4 poles			**380 V 50 Hz**		**Constant torque, two separate windings**					
10.5/5.3	**M3BP 160 M**	3GBP 168 359-••A	2940/1465	87.5/83.8	0.91/0.78	20/12.5	8.1/6.2	34/35	2.2/2.4	2.9/2.5
13.2/6.6	**M3BP 160 L**	3GBP 168 360-••A	2940/1465	89.7/84.5	0.91/0.77	25/16	8.2/6.2	43/43	2.2/2.5	3.0/2.5
15.8/7.9	**M3BP 180 L**	3GBP 188 352-••A	2945/1465	88.9/83.7	0.91/0.77	30/19	7.9/5.3	51/52	2.4/2.1	2.8/2.1
20/11	**M3BP 200 MLA**	3GBP 208 201-••A	2960/1475	90.0/89.0	0.89/0.85	38/22	8.1/7.3	65/71	1.8/2.1	2.9/2.4
26/14	**M3BP 200 MLB**	3GBP 208 202-••A	2960/1475	91.0/90.0	0.90/0.87	48/28	8.5/7.5	84/91	1.9/2.3	3.0/2.6
32/16	**M3BP 225 SMB**	3GBP 228 201-••A	2960/1480	91.5/91.5	0.91/0.76	59/36	8.1/7.3	103/103	2.5/3.9	2.7/2.5
35/18	**M3BP 225 SMC**	3GBP 228 202-••A	2960/1475	92.0/91.5	0.91/0.79	64/39	8.8/6.5	113/117	2.9/3.3	2.9/2.2
44/22	**M3BP 250 SMB**	3GBP 258 201-••A	2965/1485	93.0/93.0	0.91/0.76	80/48	9.1/8.7	142/141	2.2/3.6	3.0/3.0
62/31	**M3BP 280 SMB**	3GBP 289 221-••G	2976/1487	93.4/93.0	0.90/0.78	112/65	6.9/6.6	199/199	1.7/2.6	2.6/2.5
75/38	**M3BP 280 SMC**	3GBP 289 231-••G	2977/1487	94.0/93.3	0.91/0.79	135/79	7.5/6.9	241/244	1.9/2.8	2.8/2.5
90/45	**M3BP 315 SMB**	3GBP 319 221-••G	2980/1488	94.1/94.1	0.89/0.75	163/97	7.3/6.5	288/289	1.9/3.0	3.1/2.7
115/58	**M3BP 315 SMC**	3GBP 319 231-••G	2978/1488	94.5/94.4	0.90/0.76	205/123	6.8/6.5	369/372	1.9/3.1	2.8/2.8
140/70	**M3BP 315 MLA**	3GBP 319 411-••G	2977/1487	94.7/94.7	0.90/0.77	250/146	6.4/6.2	449/449	1.8/3.2	2.6/2.6

4

Data for other sizes on request.

The bullets in the product code indicate choice of mounting arrangement, voltage and frequency, generation code

(see ordering information page).

Marine cast iron motors, two speed

Technical data, Non-Essential/Essential Services

IP 55 - IC 411 - temperature rise 90 K

Output kW	Motor type	Speed r/min	Effi-ciency %	Power factor cos φ	Current I_N A	Current I_s / I_N	Torque T_N Nm	Torque T_s / T_N	Torque T_{max} / T_N	Moment of inertia J=1/4 GD² kgm²	Weight kg
1800/900 r/min =4-8 poles			**440 V 60 Hz**		**Fan drive, Dahlander-connection**						
10.6/2.3	**M3BP 160 M**	1760/880	87.4/76.2	0.82/0.53	19.5/7.5	7.1/3.6	58/25	2.0/1.3	2.7/2.2	0.089	127
15.6/2.8	**M3BP 160 L**	1760/880	88.1/76.8	0.84/0.49	28.5/9.5	7.0/3.8	85/30	2.0/1.5	2.7/2.4	0.119	148
17.1/3.5	**M3BP 180 M**	1770/885	88.8/78.7	0.85/0.55	30.5/10.5	6.5/3.4	92/38	1.5/1.1	2.3/1.8	0.176	194
22.2/4.5	**M3BP 180 L**	1775/885	90.1/80.0	0.84/0.52	39/14.5	7.1/3.7	119/49	2.0/1.3	2.7/2.2	0.224	207
30/6.6	**M3BP 200 MLA**	1770/880	90.5/86.0	0.86/0.64	51/15.7	7.0/4.3	162/72	2.0/1.7	2.4/1.9	0.29	255
34/8.1	**M3BP 200 MLB**	1775/880	91.5/86.5	0.86/0.64	56/19.3	8.0/4.3	183/88	2.4/1.8	2.6/1.9	0.34	275
43/10.2	**M3BP 225 SMB**	1780/890	92.0/89.5	0.78/0.61	79/25	8.0/5.1	231/109	2.3/2.1	3.0/2.3	0.49	335
51/11.2	**M3BP 225 SMC**	1765/885	92.5/89.5	0.87/0.65	84/26	7.5/4.8	276/121	2.1/1.8	2.5/2.0	0.49	355
61/15.3	**M3BP 250 SMB**	1775/885	93.0/90.0	0.86/0.70	97/31	8.1/4.8	328/165	2.4/2.0	2.7/2.0	0.88	465
87/21	**M3BP 280 SMB**	1784/891	94.0/91.7	0.86/0.65	141/46	8.1/5.1	466/225	2.7/2.7	2.9/2.1	1.5	665
98/23	**M3BP 280 SMC**	1784/891	94.4/92.3	0.87/0.65	156/51	8.4/5.0	525/247	2.9/2.9	3.0/2.1	1.85	725
115/26	**M3BP 315 SMB**	1785/892	94.0/92.5	0.87/0.68	184/54	6.5/4.6	615/278	1.5/1.5	2.4/2.3	2.6	960
167/38	**M3BP 315 MLA**	1786/892	94.8/93.1	0.87/0.67	267/80	7.5/5.0	893/407	2.1/2.1	2.7/2.4	3.5	1160
220/52	**M3BP 315 LKA**	1786/891	94.8/93.0	0.87/0.62	350/119	7.2/4.0	1176/557	2.5/2.0	2.9/2.0	4.4	1410
288/75	**M3BP 315 LKC**	1788/892	95.3/93.5	0.86/0.62	460/170	8.4/4.1	1538/803	3.1/2.0	3.4/2.1	5.5	1600
330/77	**M3BP 355 SMC**	1789/894	95.9/94.5	0.86/0.62	526/173	8.0/4.8	1761/822	2.2/1.5	3.0/2.0	7.2	1820
3600/1800 r/min =2/4 poles			**440 V 60 Hz**		**Constant torque, two separate windings**						
12/6.1	**M3BP 160 M**	3540/1765	87.5/83.8	0.91/0.78	20/12.5	8.1/6.2	32/33	2.0/2.2	2.2/2.4	0.055	133
15.2/7.6	**M3BP 160 L**	3540/1765	89.7/84.5	0.91/0.77	25/16	8.2/6.2	41/41	2.0/2.2	2.2/2.5	0.057	140
18.2/9.1	**M3BP 180 L**	3545/1765	88.9/83.7	0.91/0.77	30/19	7.9/5.3	49/49	2.2/1.9	2.4/2.1	0.108	200
23/12.7	**M3BP 200 MLA**	3560/1775	90.0/89.0	0.89/0.85	38/22	8.1/7.3	62/68	1.6/1.9	2.9/2.3	0.29	255
30/16.2	**M3BP 200 MLB**	3560/1775	91.0/90.0	0.90/0.87	48/28	8.5/7.5	81/87	1.7/2.1	2.9/2.5	0.34	275
37/18.5	**M3BP 225 SMB**	3560/1780	91.5/91.5	0.91/0.76	59/36	8.1/7.3	99/99	2.2/3.5	2.6/2.4	0.26	335
40/21	**M3BP 225 SMC**	3560/1775	92.0/91.5	0.91/0.79	64/39	8.8/6.5	107/113	2.6/2.9	2.9/2.1	0.29	355
51/25	**M3BP 250 SMB**	3565/1785	93.0/93.0	0.91/0.76	80/48	9.1/8.7	137/134	2.0/3.3	2.9/3.0	0.51	465
72/36	**M3BP 280 SMB**	3575/1786	92.9/93.0	0.91/0.79	113/65	6.9/6.9	192/192	1.5/2.6	2.5/2.6	0.9	665
86/43	**M3BP 280 SMC**	3577/1787	93.7/93.7	0.91/0.79	134/76	7.7/7.5	230/230	1.8/2.9	2.8/2.6	1.15	725
104/52	**M3BP 315 SMB**	3580/1788	93.9/93.9	0.89/0.75	163/97	7.3/6.5	277/278	1.9/3.0	3.1/2.7	1.4	940
132/67	**M3BP 315 SMC**	3578/1788	94.3/94.2	0.90/0.76	205/123	6.8/6.5	352/358	1.9/3.1	2.8/2.8	1.7	1025
160/80	**M3BP 315 MLA**	3577/1787	94.5/94.5	0.90/0.77	250/146	6.4/6.2	427/427	1.8/3.2	2.6/2.6	2.1	1190

Marine cast iron motors, two speed

Technical data, Non-Essential/Essential Services

IP 55 - IC 411 - temperature rise 90 K

Output kW	Motor type	Product code	Speed r/min	Effi-ciency %	Power factor cos φ	Current I_N A	Current I_s / I_N	Torque T_N Nm	Torque T_s / T_N	Torque T_{max} / T_N
3000/1500 r/min =2-4 poles			**380 V 50 Hz**		**Constant torque, Dahlander-connection**					
7.9/5.7	**M3BP 160 MA**	3GBP 168 306-••A	2900/1445	83.0/82.0	0.91/0.71	16/15	4.9/4.2	26/38	1.2/1.7	1.9/1.9
11/7.9	**M3BP 160 M**	3GBP 168 307-••A	2895/1440	85.1/85.1	0.92/0.79	21.5/18	4.9/4.3	36/52	1.3/1.6	1.8/1.7
13.2/9.2	**M3BP 160 L**	3GBP 168 308-••A	2905/1445	86.5/86.2	0.92/0.78	25.5/21	5.5/4.7	43/61	1.4/1.8	2.0/1.9
15.8/10.5	**M3BP 180 M**	3GBP 188 301-••A	2935/1465	88.4/88.1	0.92/0.75	30/24.5	6.9/5.7	51/68	2.0/2.4	2.5/2.4
21/14.9	**M3BP 180 L**	3GBP 188 302-••A	2945/1465	89.9/88.8	0.92/0.74	39/35	8.0/5.8	68/97	2.5/2.6	2.8/2.5
28/21	**M3BP 200 MLA**	3GBP 208 101-••A	2940/1470	89.0/90.5	0.89/0.86	53/41	7.0/6.1	91/136	1.9/2.2	2.5/2.2
34/26	**M3BP 200 MLB**	3GBP 208 102-••A	2950/1470	90.5/91.0	0.84/0.86	69/50	7.0/7.0	110/169	1.8/2.2	2.7/2.4
37/28	**M3BP 225 SMB**	3GBP 228 101-••A	2955/1475	92.5/93.0	0.92/0.88	66/53	7.3/6.7	120/181	1.5/2.0	2.6/2.4
44/35	**M3BP 225 SMC**	3GBP 228 102-••A	2960/1475	92.5/93.0	0.84/0.87	87/65	7.6/7.3	142/227	1.8/2.1	2.9/2.6
60/44	**M3BP 250 SMB**	3GBP 258 101-••A	2940/1475	93.0/93.5	0.93/0.88	105/81	6.8/7.1	195/285	1.5/2.2	2.4/2.6
90/65	**M3BP 280 SMB**	3GBP 289 228-••G	2960/1485	93.2/94.6	0.92/0.86	159/122	6.6/7.9	290/418	1.3/2.3	2.9/3.0
100/70	**M3BP 280 SMC**	3GBP 289 238-••G	2968/1487	93.4/94.6	0.94/0.87	173/129	7.9/9.0	322/450	1.7/2.7	2.9/3.3
115/75	**M3BP 315 SMB**	3GBP 319 228-••G	2970/1484	94.8/94.8	0.88/0.74	210/162	6.5/6.3	370/483	1.3/2.5	2.5/2.5
157/108	**M3BP 315 MLA**	3GBP 319 418-••G	2971/1485	94.8/94.8	0.89/0.76	283/228	7.2/6.5	505/695	1.7/2.7	2.7/2.7
1500/1000 r/min =4/6 poles			**380 V 50 Hz**		**Constant torque, two separate windings**					
6.6/4.8	**M3BP 160 M**	3GBP 168 361-••A	1470/970	84.8/80.0	0.79/0.72	14.5/12	7.5/5.0	43/47	2.2/1.7	3.0/2.1
10/7.4	**M3BP 160 L**	3GBP 168 362-••A	1470/970	86.7/82.7	0.80/0.71	21/18.5	8.0/5.5	65/73	2.5/2.1	3.1/2.4
13.2/8.8	**M3BP 180 L**	3GBP 188 354-••A	1475/975	88.4/83.1	0.83/0.74	27.5/22	6.7/4.5	86/86	1.9/1.4	2.5/1.9
16/11	**M3BP 200 MLA**	3GBP 208 204-••A	1475/985	88.5/86.0	0.91/0.86	31/23	7.7/7.7	104/107	2.1/2.6	2.5/2.6
20/13	**M3BP 200 MLB**	3GBP 208 205-••A	1480/985	89.5/86.5	0.89/0.87	38/27	8.1/7.8	129/126	2.4/2.7	2.8/2.6
22/15	**M3BP 200 MLC**	3GBP 208 206-••A	1475/980	89.0/85.5	0.87/0.88	44/30	7.9/6.7	142/146	2.4/2.3	2.7/2.2
28/18	**M3BP 225 SMB**	3GBP 228 203-••A	1480/985	90.0/89.5	0.88/0.86	53/36	8.9/8.4	181/175	2.4/2.5	2.9/2.8
32/21	**M3BP 225 SMC**	3GBP 228 204-••A	1480/985	90.5/90.0	0.88/0.87	62/41	8.5/7.6	206/204	2.2/2.3	2.8/2.6
44/28	**M3BP 250 SMB**	3GBP 258 202-••A	1475/985	92.5/90.5	0.89/0.80	82/60	7.7/7.3	285/271	2.4/3.2	2.7/2.7
63/42	**M3BP 280 SMB**	3GBP 289 224-••G	1487/989	93.4/92.0	0.87/0.77	120/90	7.4/7.0	406/406	2.3/3.0	2.7/2.4
72/48	**M3BP 280 SMC**	3GBP 289 234-••A	1485/988	93.5/92.4	0.87/0.79	136/101	6.9/7.0	463/464	2.2/3.2	2.6/2.4
80/54	**M3BP 315 SMB**	3GBP 319 224-••G	1485/990	93.5/93.8	0.87/0.78	150/112	6.0/6.7	515/521	1.6/3.3	2.4/2.9
100/67	**M3BP 315 SMC**	3GBP 319 234-••G	1485/989	93.6/93.8	0.87/0.80	187/136	5.6/6.1	643/647	1.6/2.9	2.3/2.5
125/85	**M3BP 315 MLA**	3GBP 319 414-••G	1488/989	94.3/94.1	0.87/0.80	232/172	6.6/6.5	802/821	2.0/3.1	2.8/2.5

4

Data for other sizes on request.

The bullets in the product code indicate choice of mounting arrangement, voltage and frequency, generation code

(see ordering information page).

Marine cast iron motors, two speed

Technical data, Non-Essential/Essential Services

IP 55 - IC 411 - temperature rise 90 K

Output kW	Motor type	Speed r/min	Effi-ciency %	Power factor cos φ	Current I_N / A	Current I_s / I_N	Torque T_N / Nm	Torque T_s / T_N	Torque T_{max} / T_N	Moment of inertia J=1/4 GD² kgm²	Weight kg
3600/1800 r/min =2-4 poles			**440 V 60 Hz**		**Constant torque, Dahlander-connection**						
9.1/6.6	**M3BP 160 MA**	3500/1745	83.0/82.0	0.91/0.71	16/15	4.9/4.2	25/36	1.1/1.5	1.9/1.9	0.039	118
12.7/9.1	**M3BP 160 M**	3495/1740	85.1/85.1	0.92/0.79	21.5/18	4.9/4.3	35/50	1.2/1.4	1.3/1.6	0.054	133
15.2/10.6	**M3BP 160 L**	3505/1745	86.5/86.2	0.92/0.78	25.5/21	5.5/4.1	41/58	1.3/1.6	1.4/1.8	0.057	140
18.7/12	**M3BP 180 M**	3535/1765	88.4/88.1	0.92/0.75	30/24.5	6.9/5.7	51/65	1.7/2.2	1.9/2.4	0.094	194
24.2/17.1	**M3BP 180 L**	3545/1765	89.9/88.8	0.92/0.74	39/35	8.0/5.8	65/93	2.2/2.3	2.5/2.6	0.108	200
32/24	**M3BP 200 MLA**	3540/1770	89.0/90.5	0.89/0.86	53/41	7.0/6.1	86/130	1.7/2.0	2.5/2.2	0.29	255
39/30	**M3BP 200 MLB**	3550/1770	90.5/91.0	0.84/0.86	69/50	7.0/7.1	105/162	1.6/2.0	2.7/2.4	0.34	275
43/32	**M3BP 225 SMB**	3555/1775	92.5/93.0	0.92/0.88	66/52	7.3/6.7	116/172	1.3/1.8	2.5/2.4	0.42	330
51/40	**M3BP 225 SMC**	3560/1775	92.5/93.0	0.84/0.87	87/65	7.6/7.3	137/215	1.6/1.9	2.8/2.6	0.49	355
69/51	**M3BP 250 SMB**	3540/1775	93.0/93.5	0.93/0.88	105/81	6.8/7.1	188/275	1.3/2.0	2.4/2.5	0.88	465
103/75	**M3BP 280 SMB**	3560/1785	92.9/94.8	0.92/0.86	157/121	6.6/8.0	276/401	1.2/2.1	2.9/3.0	1.5	665
115/80	**M3BP 280 SMC**	3566/1787	93.0/94.8	0.94/0.87	173/128	7.8/9.2	308/428	1.5/2.6	2.9/3.4	1.85	725
132/86	**M3BP 315 SMB**	3570/1784	94.6/94.6	0.88/0.74	210/162	6.5/6.3	353/460	1.2/2.3	2.5/2.5	1.4	940
180/124	**M3BP 315 MLA**	3571/1785	94.6/94.6	0.89/0.76	283/228	7.2/6.5	481/663	1.5/2.4	2.7/2.7	3.5	1160
1800/1200 r/min =4/6 poles			**440 V 60 Hz**		**Constant torque, two separate windings**						
7.6/5.5	**M3BP 160 M**	1770/1170	84.8/80.0	0.79/0.72	14.5/12	7.5/5.0	41/45	2.0/1.5	2.2/1.7	0.089	127
11.5/8.5	**M3BP 160 L**	1770/1170	86.7/82.7	0.80/0.71	21/18.5	8.0/5.5	62/69	2.2/1.9	2.5/2.1	0.119	148
15.2/10.1	**M3BP 180 L**	1775/1175	88.4/83.1	0.83/0.74	27.5/22	6.7/4.5	82/82	1.7/1.3	1.9/1.4	0.224	207
19/13	**M3BP 200 MLA**	1775/1185	88.5/86.0	0.91/0.86	31/23	7.7/7.7	102/105	1.8/2.3	2.4/2.5	0.43	260
23/15	**M3BP 200 MLB**	1780/1185	89.5/86.5	0.89/0.87	38/27	8.1/7.8	123/121	2.2/2.4	2.7/2.5	0.49	275
25/17	**M3BP 200 MLC**	1775/1180	89.0/85.5	0.87/0.88	44/30	7.9/6.7	135/138	2.2/2.1	2.6/2.2	0.49	275
32/21	**M3BP 225 SMB**	1780/1185	90.0/89.5	0.88/0.86	53/36	8.9/8.4	172/169	2.2/2.2	2.9/2.7	0.64	320
37/24	**M3BP 225 SMC**	1780/1185	90.5/90.0	0.88/0.87	62/41	8.5/7.6	199/194	2.0/2.1	2.7/2.6	0.75	345
51/32	**M3BP 250 SMB**	1775/1185	92.5/90.5	0.89/0.80	82/60	7.7/7.3	275/258	2.1/2.9	2.6/2.7	0.88	465
72/48	**M3BP 280 SMB**	1786/1188	93.4/92.5	0.86/0.78	119/88	7.5/7.6	385/386	2.2/3.2	2.7/2.5	1.5	665
83/55	**M3BP 280 SMC**	1785/1188	93.7/93.0	0.87/0.79	134/99	7.1/7.6	444/142	2.1/3.3	2.6/2.5	1.85	725
92/62	**M3BP 315 SMB**	1785/1190	93.3/93.6	0.87/0.78	150/112	6.0/6.7	492/497	1.5/3.0	2.4/2.9	2.6	960
115/77	**M3BP 315 SMC**	1785/1189	93.4/93.6	0.87/0.80	187/136	5.6/6.1	615/618	1.5/2.6	2.3/2.5	2.9	1000
144/97	**M3BP 315 MLA**	1788/1189	94.1/93.9	0.87/0.80	232/172	6.6/6.5	767/787	1.8/2.7	2.8/2.5	3.5	1160

Marine cast iron motors, two speed

Technical data, Non-Essential/Essential Services

IP 55 - IC 411 - temperature rise 90 K

Output kW	Motor type	Product code	Speed r/min	Effi-ciency %	Power factor cos φ	Current I_N A	Current I_s / I_N	Torque T_N Nm	Torque T_s / T_N	Torque T_{max} / T_N
1500/750 r/min =4/8 poles			**380 V 50 Hz**		**Constant torque, two separate windings**					
4.8/2.4	**M3BP 160 M**	3GBP 168 363-••A	1465/730	83.6/70.1	0.82/0.57	11/9.5	6.5/4.0	31/31	1.8/1.8	2.5/2.3
7.9/4	**M3BP 160 L**	3GBP 168 364-••A	1465/730	86.3/72.6	0.82/0.56	17/15	7.0/4.2	52/52	2.1/2.1	2.7/2.4
12.3/6.2	**M3BP 180 L**	3GBP 188 356-••A	1475/735	88.1/76.2	0.82/0.56	26/22	7.1/4.0	80/81	2.0/1.8	2.7/2.2
16/8.3	**M3BP 200 MLA**	3GBP 208 207-••A	1475/730	89.5/82.5	0.85/0.65	32/24	7.6/4.4	104/109	2.3/1.9	2.6/1.8
19/9.7	**M3BP 200 MLB**	3GBP 208 208-••A	1480/735	90.5/83.0	0.84/0.60	38/30	8.8/4.8	123/126	2.7/2.5	3.0/2.3
25/12.3	**M3BP 225 SMB**	3GBP 228 205-••A	1480/735	90.0/85.5	0.85/0.61	50/36	7.8/5.0	161/160	2.1/2.5	2.7/2.3
30/15	**M3BP 225 SMC**	3GBP 228 206-••A	1480/735	92.0/87.0	0.86/0.66	59/40	8.1/4.9	194/195	2.2/2.3	2.8/2.0
44/22	**M3BP 250 SMB**	3GBP 258 203-••A	1480/740	92.5/88.0	0.87/0.60	83/63	8.8/6.2	284/284	2.7/3.6	3.1/3..0
55/28	**M3BP 280 SMB**	3GBP 289 222-••G	1486/742	92.9/90.3	0.88/0.64	103/74	7.3/6.3	353/360	1.9/3.3	2.6/2.4
68/34	**M3BP 280 SMC**	3GBP 289 232-••G	1486/740	93.4/90.9	0.88/0.69	127/82	7.6/6.0	437/439	2.2/2.9	2.6/2.2
86/43	**M3BP 315 SMB**	3GBP 319 222-••G	1488/740	93.8/91.3	0.86/0.69	162/104	6.8/4.8	552/555	1.9/2.6	2.8/2.3
105/53	**M3BP 315 SMC**	3GBP 319 232-••G	1488/740	94.0/91.8	0.86/0.66	197/133	6.7/4.8	674/684	2.0/2.8	2.9/2.3
1500/750 r/min =4-8 poles			**380 V 50 Hz**		**Constant torque, Dahlander connection**					
7/4	**M3BP 160 M**	3GBP 168 309-••A	1440/725	84.1/76.1	0.86/0.60	15/13.5	4.6/3.4	46/53	1.3/1.3	1.8/1.8
10.5/6.2	**M3BP 160 L**	3GBP 168 310-••A	1445/725	86.5/78.4	0.86/0.59	21.5/20.5	5.2/3.5	69/82	1.5/1.4	2.0/1.9
14/7	**M3BP 180 L**	3GBP 188 304-••A	1460/730	88.4/79.8	0.86/0.54	28.5/25	4.8/3.5	92/92	1.2/1.4	1.8/2.0
19/11	**M3BP 200 MLA**	3GBP 208 107-••A	1475/735	87.5/86.0	0.81/0.69	41/29	6.8/6.3	123/143	2.1/2.7	2.7/2.9
22/13	**M3BP 200 MLB**	3GBP 208 108-••A	1475/735	89.0/86.0	0.86/0.67	44/35	7.8/6.2	142/169	2.3/2.7	2.8/2.8
26/15	**M3BP 200 MLC**	3GBP 208 109-••A	1475/735	90.0/88.0	0.91/0.75	49/35	7.2/6.2	168/195	2.2/2.7	2.4/2.5
31/19	**M3BP 225 SMB**	3GBP 228 105-••A	1475/735	90.0/89.0	0.90/0.74	59/45	6.8/5.8	201/247	1.7/2.1	2.2/2.3
37/22	**M3BP 225 SMC**	3GBP 228 106-••A	1475/735	91.0/89.5	0.91/0.75	69/50	7.0/6.1	240/286	1.8/2.2	2.3/2.3
44/26	**M3BP 250 SMB**	3GBP 258 103-••A	1490/750	92.5/91.0	0.91/0.71	80/60	7.5/6.6	310/374	2.2/2.6	2.6/2.6
65/40	**M3BP 280 SMB**	3GBP 289 229-••G	1483/742	92.9/92.5	0.89/0.72	120/92	7.0/6.7	419/515	1.9/2.7	2.5/2.5
78/50	**M3BP 280 SMC**	3GBP 289 239-••G	1487/742	93.9/93.0	0.89/0.71	142/114	8.4/7.3	501/643	2.4/2.9	2.9/2.6
86/58	**M3BP 315 SMB**	3GBP 319 229-••G	1486/742	93.9/93.8	0.90/0.77	155/122	7.0/6.1	553/746	1.2/1.5	2.8/2.5
135/85	**M3BP 315 MLA**	3GBP 319 419-••G	1486/742	94.6/94.2	0.90/0.76	241/181	7.2/6.2	868/1094	1.4/1.6	2.8/2.6

Data for other sizes on request.

The bullets in the product code indicate choice of mounting arrangement, voltage and frequency, generation code (see ordering information page).

Marine cast iron motors, two speed

Technical data, Non-Essential/Essential Services

IP 55 - IC 411 - temperature rise 90 K

Output kW	Motor type	Speed r/min	Effi-ciency %	Power factor cos φ	Current I_N A	Current I_s / I_N	Torque T_N Nm	Torque T_s / T_N	Torque T_{max} / T_N	Moment of inertia J=1/4 GD² kgm²	Weight kg
1800/900 r/min =4/8 poles			**440 V 60 Hz**		**Constant torque, two separate windings**						
5.5/2.8	**M3BP 160 M**	1765/880	83.6/70.1	0.82/0.57	11/9.5	6.5/4.0	30/30	1.6/1.6	2.5/2.2	0.089	127
9.1/4.6	**M3BP 160 L**	1765/880	86.3/72.6	0.82/0.56	17/4.2	7.0/4.2	49/50	1.9/1.9	2.7/2.4	0.119	148
14.1/7.1	**M3BP 180 L**	1775/885	88.1/76.2	0.82/0.56	26/22	7.1/4.0	76/77	1.8/1.6	2.7/2.2	0.225	207
19/9.6	**M3BP 200 MLA**	1775/880	89.5/82.5	0.85/0.65	32/24	7.6/4.4	102/104	2.0/1.7	2.5/1.8	0.29	255
22/11.2	**M3BP 200 MLB**	1780/885	90.5/83.0	0.84/0.60	38/30	8.8/4.8	118/121	2.4/2.2	2.9/2.2	0.34	275
29/14.2	**M3BP 225 SMB**	1780/885	90.0/85.5	0.85/0.61	50/36	7.8/5.0	156/153	1.9/2.2	2.6/2.3	0.42	330
35/17.4	**M3BP 225 SMC**	1780/885	92.0/87.0	0.86/0.66	58/40	8.1/4.9	188/188	1.9/2.0	2.7/1.9	0.49	355
51/25	**M3BP 250 SMB**	1780/890	92.5/88.0	0.87/0.60	83/63	8.8/6.2	274/268	2.4/3.3	3.0/3.0	0.89	465
64/32	**M3BP 280 SMB**	1785/892	92.9/91.3	0.88/0.64	104/71	7.4/6.9	342/343	1.8/3.4	2.6/2.5	1.5	665
78/39	**M3BP 280 SMC**	1786/890	93.6/91.7	0.88/0.69	124/81	8.0/6.4	417/418	2.1/2.9	2.8/2.3	1.85	725
99/50	**M3BP 315 SMB**	1788/890	93.6/91.1	0.86/0.69	162/104	6.8/4.8	529/536	1.7/2.4	2.8/2.3	2.6	960
120/61	**M3BP 315 SMC**	1788/890	93.8/91.6	0.86/0.66	197/133	6.7/4.8	641/654	1.8/2.5	2.9/2.3	2.9	1000
1800/900 r/min =4-8 poles			**440 V 60 Hz**		**Constant torque, Dahlander connection**						
8/4.6	**M3BP 160 M**	1740/875	84.1/76.1	0.86/0.60	15/13.5	4.6/3.4	44/50	1.2/1.2	1.8/1.8	0.089	127
12.1/7.1	**M3BP 160 L**	1745/875	86.5/78.4	0.86/0.59	21.5/20.5	5.2/3.5	66/78	1.3/1.3	2.0/1.9	0.119	148
16.1/8	**M3BP 180 L**	1760/880	88.4/79.8	0.86/0.54	28.5/25	4.8/3.5	87/87	1.1/1.3	1.8/2.0	0.224	207
22/12.7	**M3BP 200 MLA**	1775/885	87.5/86.0	0.81/0.69	41/28	6.8/6.3	118/137	1.9/2.4	2.6/2.8	0.37	245
25/15	**M3BP 200 MLB**	1775/885	89.0/86.0	0.86/0.67	44/35	7.8/6.3	135/162	2.1/2.4	2.8/2.7	0.43	260
30/17.4	**M3BP 200 MLC**	1775/885	90.0/88.0	0.91/0.75	49/35	7.3/6.2	161/188	2.0/2.4	2.3/2.4	0.49	275
36/22	**M3BP 225 SMB**	1775/885	90.0/89.0	0.90/0.74	59/45	6.8/5.8	194/238	1.5/1.9	2.1/2.2	0.64	320
43/25	**M3BP 225 SMC**	1775/885	91.0/89.5	0.91/0.75	69/50	7.0/6.1	231/270	1.6/2.0	2.2/2.3	0.75	345
50/30	**M3BP 250 SMB**	1795/895	92.6/91.0	0.91/0.70	80/60	7.6/6.6	301/365	1.9/2.3	2.5/2.5	1.49	460
74/46	**M3BP 280 SMB**	1784/892	93.1/93.0	0.89/0.73	119/90	7.1/7.0	401/492	1.8/2.6	2.5/2.5	2.2	645
90/58	**M3BP 280 SMC**	1786/892	93.9/93.5	0.90/0.73	140/113	8.6/7.6	481/621	2.3/2.9	2.9/2.6	2.85	725
99/67	**M3BP 315 SMB**	1784/892	93.7/93.6	0.90/0.77	155/122	7.0/6.1	530/717	1.1/1.4	2.8/2.5	4.1	930
155/98	**M3BP 315 MLA**	1786/892	94.4/94.0	0.90/0.76	241/181	7.2/6.2	829/1049	1.3/1.4	2.8/2.6	5.8	1150

Marine cast iron motors

Technical data, Non-Essential Services

IP 55 - IC 411 - temperature rise 90 K

Output kW	Motor type		Product code		Speed r/min	Effi-ciency %	Power factor cos φ	Current I_N A	Current I_s / I_N	Torque T_N Nm	Torque T_s / T_N	Torque T_{max} / T_N
3000 r/min = 2 poles					**380 V 50 Hz**				**Basic design**			
0.37	**M2QA**	**71 M2A**	3GQA	071 301-••A	2765	70.0	0.83	0.97	5.7	1.28	2.0	2.0
0.55	**M2QA**	**71 M2B**	3GQA	071 302-••A	2780	73.0	0.84	1.36	5.7	1.89	2.0	2.0
0.75	**M2QA**	**80 M2A**	3GQA	081 301-••A	2840	75.0	0.87	1.75	5.7	2.52	2.4	2.7
1.1	**M2QA**	**80 M2B**	3GQA	081 302-••A	2855	77.0	0.86	2.52	6.5	3.68	2.2	2.3
1.5	**M2QA**	**90 S2A**	3GQA	091 101-••A	2850	79.0	0.90	3.21	6.5	5.03	2.2	2.3
2.2	**M2QA**	**90 L2A**	3GQA	091 501-••A	2850	81.5	0.90	4.56	6.5	7.37	2.9	3.2
3	**M2QA**	**100 L2A**	3GQA	101 501-••A	2870	82.5	0.90	6.14	6.5	10	2.5	2.9
4	**M2QA**	**112 M2A**	3GQA	111 301-••A	2885	84.5	0.92	7.82	6.5	13.2	2.6	3.0
5.5	**M2QA**	**132 S2A**	3GQA	131 101-••A	2905	87.0	0.90	10.67	6.5	18.1	2.4	2.9
7.5	**M2QA**	**132 S2B**	3GQA	131 102-••A	2905	87.5	0.90	14.47	6.5	24.7	2.4	3.2
11	**M2QA**	**160 M2A**	3GQA	161 301-••A	2930	89.5	0.91	20.52	6.1	35.9	2.5	3.0
15	**M2QA**	**160 M2B**	3GQA	161 302-••A	2930	90.0	0.91	27.83	6.1	48.9	2.3	2.4
18.5	**M2QA**	**160 L2A**	3GQA	161 501-••A	2930	90.0	0.91	34.32	6.1	60	2.3	2.5
22	**M2QA**	**180 M2A**	3GQA	181 301-••A	2940	90.7	0.91	40.5	6.1	71	2.1	2.5
30	**M2QA**	**200 L2A**	3GQA	201 501-••A	2950	91.0	0.91	55	6.1	97	2.1	2.3
37	**M2QA**	**200 L2B**	3GQA	201 502-••A	2950	91.7	0.92	66	6.1	120	2.1	2.3
45	**M2QA**	**225 M2A**	3GQA	221 301-••A	2965	92.0	0.90	82	6.5	145	2.4	2.4
55	**M2QA**	**250 M2A**	3GQA	251 301-••A	2960	93.0	0.90	100	6.9	177	2.2	2.4
75	**M2BAT**	**280 SMA**	3GBA	281 210-••D	2970	94.0	0.88	137	6.2	241	1.5	2.3
90	**M2BAT**	**280 SMB**	3GBA	281 220-••D	2966	94.2	0.89	163	5.8	290	1.5	2.2
110	**M2BAT**	**315 SMA**	3GBA	311 210-••D	2976	94.1	0.86	208	5.7	353	1.3	2.2
132	**M2BAT**	**315 SMB**	3GBA	311 220-••D	2974	94.5	0.87	243	5.8	423	1.5	2.2
160	**M2BAT**	**315 SMC**	3GBA	311 230-••D	2972	95.0	0.88	290	5.6	514	1.5	2.1
200	**M2BAT**	**315 MLA**	3GBA	311 410-••D	2978	95.6	0.89	358	7.3	641	2.3	2.8
250	**M2BAT**	**355 S**	3GBA	351 100-••D	2981	95.7	0.90	440	6.2	801	1.4	2.5
3000 r/min = 2 poles					**380 V 50 Hz**				**High-output design**			
5.5	**M2QA**	**112 L2 A**	3GQA	111 501-••A	2871	85.5	0.92	10.62	7.2	18.3	2.6	2.6
8.2	**M2QA**	**132 M2A**	3GQA	131 301-••B	2950	87.0	0.91	15.74	7.5	26.54	2.4	2.9
9.5	**M2QA**	**132 M2B**	3GQA	131 302-••B	2950	87.5	0.91	18.13	8.5	30.75	2.4	2.9
19	**M2QA**	**160 L2B**	3GQA	161 502-••A	2930	90.0	0.91	35.25	5.9	61	2.2	2.4
27	**M2QA**	**180 L2A**	3GQA	181 501-••A	2956	90.8	0.88	51	6.4	87	2.2	2.5
41	**M2QA**	**200 L2C**	3GQA	201 503-••A	2820	91.7	0.92	74	6.4	139	2.1	2.3
55	**M2QA**	**225 M2B**	3GQA	221 302-••A	2970	92.2	0.89	102	7.0	177	2.4	2.4
65	**M2QA**	**250 M2B**	3GQA	251 302-••A	2950	93.0	0.91	117	7.0	210	2.0	1.9
110	**M2BAT**	**280 SMC**	3GBA	281 230-••D	2968	94.8	0.90	198	6.0	354	1.7	2.3

The bullets in the product code indicate choice of mounting arrangement, voltage and frequency, generation code

(see ordering information page).

Marine cast iron motors

Technical data, Non-Essential Services

IP 55 - IC 411 - temperature rise 90 K

Output kW	Motor type		Speed r/min	Effi-ciency %	Power factor cos φ	Current I_N / A	Current I_s / I_N	Torque T_N / Nm	Torque T_s / T_N	Torque T_{max} / T_N	Moment of inertia J=1/4 GD² kgm²	Weight kg
3600 r/min = 2 poles			**440 V 60 Hz**					**Basic design**				
0.43	**M2QA**	**71 M2A**	3340	69.8	0.84	0.96	5.5	1.23	2.0	2.0	0.0003	10
0.66	**M2QA**	**71 M2B**	3340	72.8	0.85	1.34	5.8	1.8	2.0	2.0	0.00037	11
0.86	**M2QA**	**80 M2A**	3408	74.8	0.88	1.71	5.8	2.41	2.4	2.7	0.00091	16
1.27	**M2QA**	**80 M2B**	3426	76.7	0.87	2.5	6.6	3.54	2.2	2.3	0.00107	17
1.73	**M2QA**	**90 S2A**	3420	0.0	0.91	3.17	6.6	4.83	2.2	2.3	0.00135	21
2.53	**M2QA**	**90 L2A**	3420	81.3	0.91	4.49	6.6	7.06	2.9	3.2	0.00163	24
3.45	**M2QA**	**100 L2A**	3444	82.2	0.91	6.05	6.6	9.57	2.5	2.9	0.00402	33
4.6	**M2QA**	**112 M2A**	3462	84.3	0.93	7.7	6.6	12.7	2.6	3.0	0.00671	42
6.33	**M2QA**	**132 S2A**	3486	86.7	0.91	9.44	6.6	17.3	2.4	2.9	0.01241	58
8.6	**M2QA**	**132 S2B**	3486	87.3	0.91	14.21	6.6	23.6	2.4	3.2	0.01491	73
12.7	**M2QA**	**160 M2A**	3516	89.2	0.92	20.31	6.2	34.5	2.5	3.0	0.0436	112
17.3	**M2QA**	**160 M2B**	3516	89.7	0.92	27.51	6.2	47	2.3	2.4	0.0551	122
21.3	**M2QA**	**160 L2A**	3516	89.8	0.92	33.83	6.2	57	2.3	2.5	0.06549	142
25.3	**M2QA**	**180 M2A**	3528	90.5	0.92	39.87	6.2	68	2.1	2.5	0.08805	170
34.5	**M2QA**	**200 L2A**	3540	90.8	0.92	54	6.2	93	2.1	2.3	0.14821	235
42.6	**M2QA**	**200 L2B**	3540	91.4	0.93	65	6.2	115	2.1	2.3	0.16822	254
51.8	**M2QA**	**225 M2A**	3558	91.8	0.91	81	6.6	139	2.4	2.4	0.29345	328
63	**M2QA**	**250 M2A**	3552	92.7	0.91	98	6.9	169	2.2	2.4	0.3784	390
86	**M2BAT**	**280 SMA**	3568	93.4	0.88	137	6.1	230	1.4	2.3	0.7	570
103	**M2BAT**	**280 SMB**	3565	93.8	0.89	162	5.8	276	1.4	2.2	0.82	610
125	**M2BAT**	**315 SMA**	3575	93.3	0.86	205	5.8	334	1.2	2.3	1.05	820
150	**M2BAT**	**315 SMB**	3573	93.9	0.87	241	5.7	401	1.4	2.2	1.25	870
180	**M2BAT**	**315 SMC**	3571	94.4	0.88	284	5.6	481	1.4	2.2	1.5	960
230	**M2BAT**	**315 MLA**	3577	95.2	0.89	358	7.3	614	2.1	2.8	1.95	1130
285	**M2BAT**	**355 S**	3580	95.7	0.90	437	6.2	760	1.2	2.6	2.7	1500
3600 r/min = 2 poles			**440 V 60 Hz**					**High-output design**				
6.33	**M2QA**	**112 L2 A**	3475	84.8	0.93	10.52	6.7	17.4	2.5	2.9	0.008263	49
9.43	**M2QA**	**132 M2A**	3505	87.5	0.91	15.54	7.0	25.7	2.4	3.2	0.014995	68
10.6	**M2QA**	**132 M2B**	3510	87.8	0.91	17.47	7.5	28.9	2.5	3.2	0.01768	73
21.8	**M2QA**	**160 L2B**	3516	89.8	0.92	34.6	5.9	58	2.2	2.4	0.06549	130
30.2	**M2QA**	**180 L2A**	3550	90.5	0.92	47.66	6.5	81	2.1	2.4	0.10339	185
47.1	**M2QA**	**200 L2C**	3420	91.4	0.93	72	6.2	132	2.1	2.3	0.18473	276
63.25	**M2QA**	**225 M2B**	3570	92.0	0.90	100	6.7	169	2.4	2.4	0.33431	340
72	**M2QA**	**250 M2B**	3565	92.7	0.91	112	7.5	193	2.1	2.4	0.45829	411
120	**M2BAT**	**280 SMC**	3570	94.5	0.90	187	6.3	321	1.6	2.4	1.05	660

Marine cast iron motors

Technical data, Non-Essential Services

IP 55 - IC 411 - temperature rise 90 K

Output kW	Motor type		Product code		Speed r/min	Effi-ciency %	Power factor cos φ	Current I_N A	Current I_s / I_N	Torque T_N Nm	Torque T_s / T_N	Torque T_{max} / T_N
1500 r/min = 4 poles					**380 V 50 Hz**				**Basic design**			
0.25	**M2QA**	**71 M4A**	3GQA	072 301-••A	1385	66.0	0.74	0.78	4.9	1.72	2.0	2.0
0.37	**M2QA**	**71 M4B**	3GQA	072 302-••A	1385	69.0	0.78	1.04	4.9	2.551	2.0	2.0
0.55	**M2QA**	**80 M4A**	3GQA	082 301-••A	1410	73.0	0.76	1.51	4.9	3.73	2.4	2.5
0.75	**M2QA**	**80 M4B**	3GQA	082 302-••A	1415	74.0	0.79	1.95	5.5	5.06	2.4	2.5
1.1	**M2QA**	**90 S4A**	3GQA	092 101-••A	1400	77.0	0.81	2.68	5.5	7.5	2.2	2.3
1.5	**M2QA**	**90 L4A**	3GQA	092 501-••A	1390	78.5	0.81	3.58	5.5	10.3	2.5	2.5
2.2	**M2QA**	**100 L4A**	3GQA	102 501-••A	1430	80.0	0.84	4.97	5.5	14.7	2.4	2.5
3	**M2QA**	**100 L4B**	3GQA	102 502-••A	1420	82.0	0.86	6.46	6.1	20.2	2.3	2.7
4	**M2QA**	**112 M4A**	3GQA	112 301-••A	1420	84.5	0.85	8.46	6.1	26.9	2.3	2.7
5.5	**M2QA**	**132 S4A**	3GQA	132 101-••A	1420	85.5	0.87	11.23	6.1	37	2.4	2.5
7.5	**M2QA**	**132 M4A**	3GQA	132 301-••A	1430	87.5	0.84	15.5	6.1	50	2.5	2.7
11	**M2QA**	**160 M4A**	3GQA	162 301-••A	1460	88.5	0.88	21.46	6.1	72	2.4	2.8
15	**M2QA**	**160 L4A**	3GQA	162 501-••A	1460	89.5	0.89	28.61	6.1	98	2.3	2.4
18.5	**M2QA**	**180 M4A**	3GQA	182 301-••A	1470	91.0	0.89	34.71	6.1	120	2.1	2.4
22	**M2QA**	**180 L4A**	3GQA	182 501-••A	1470	91.0	0.90	40.81	6.1	143	2.2	2.6
30	**M2QA**	**200 L4A**	3GQA	202 501-••A	1465	91.0	0.90	55	6.1	196	2.1	2.4
37	**M2QA**	**225 S4A**	3GQA	222 101-••A	1475	92.0	0.85	71	6.6	240	2.1	2.4
45	**M2QA**	**225 M4A**	3GQA	222 301-••A	1475	92.5	0.88	84	6.6	291	2.1	2.3
55	**M2QA**	**250 M4A**	3GQA	252 301-••A	1480	92.5	0.87	103	6.6	355	2.4	2.4
75	**M2BAT**	**280 SMA**	3GBA	282 210-••D	1480	94.0	0.85	143	5.8	484	1.9	2.3
90	**M2BAT**	**280 SMB**	3GBA	282 220-••D	1478	94.2	0.86	169	5.8	581	1.9	2.1
110	**M2BAT**	**315 SMA**	3GBA	312 210-••D	1484	94.5	0.85	209	5.8	708	1.5	2.0
132	**M2BAT**	**315 SMB**	3GBA	312 220-••D	1483	94.8	0.86	248	5.6	850	1.7	2.1
160	**M2BAT**	**315 SMC**	3GBA	312 230-••D	1483	95.0	0.86	300	6.0	1030	1.9	2.3
200	**M2BAT**	**315 MLA**	3GBA	312 410-••D	1482	95.2	0.86	375	5.8	1289	1.9	2.2
250	**M2BAT**	**355 S**	3GBA	352 100-••D	1487	95.6	0.86	465	6.0	1605	1.8	2.3
1500 r/min = 4 poles					**380 V 50 Hz**				**High-output design**			
5.5	**M2QA**	**112 L4A**	3GQA	112 501-••A	1420	85.0	0.84	11.77	6.5	37	2.4	2.7
8.2	**M2QA**	**132 M4B**	3GQA	132 302-••A	1422	88.0	0.83	17.06	6.5	55	2.5	2.7
9.5	**M2QA**	**132 M4C**	3GQA	132 303-••A	1438	88.2	0.83	19.72	7.2	63	2.5	2.7
17	**M2QA**	**160 L4B**	3GQA	162 502-••A	1460	90.0	0.87	32.99	6.5	111	2.3	2.4
25	**M2QA**	**180 L4B**	3GQA	182 502-••A	1465	91.0	0.89	46.9	6.5	163	2.0	2.4
35	**M2QA**	**200 L4B**	3GQA	202 502-••A	1470	91.0	0.89	66	6.5	227	2.1	2.4
51	**M2QA**	**225 M4B**	3GQA	222 302-••A	1480	92.5	0.87	96	7.2	329	2.1	2.3
62	**M2QA**	**250 M4B**	3GQA	252 302-••A	1475	92.8	0.87	117	7.2	401	2.4	2.4
110	**M2BAT**	**280 SMC**	3GBA	282 230-••D	1481	94.8	0.86	204	6.5	709	2.4	2.5

The bullets in the product code indicate choice of mounting arrangement, voltage and frequency, generation code

(see ordering information page).

Marine cast iron motors

Technical data, Non-Essential Services

IP 55 - IC 411 - temperature rise 90 K

Output kW	Motor type		Speed r/min	Effi-ciency %	Power factor cos φ	Current I_N A	Current I_s / I_N	Torque T_N Nm	Torque T_s / T_N	Torque T_{max} / T_N	Moment of inertia J=1/4 GD² kgm²	Weight kg
1800 r/min = 4 poles			**440 V 60 Hz**					**Basic design**				
0.29	**M2QA**	**71 M4A**	1670	65.0	0.75	0.78	5.0	1.66	2.0	2.0	0.00053	11
0.43	**M2QA**	**71 M4B**	1670	68.0	0.77	1.08	5.0	2.46	2.0	2.0	0.00066	11
0.63	**M2QA**	**80 M4A**	1692	72.7	0.77	1.48	5.0	3.56	2.4	2.5	0.00145	16
0.86	**M2QA**	**80 M4B**	1698	73.8	0.80	1.91	5.6	4.84	2.4	2.5	0.00174	17
1.27	**M2QA**	**90 S4A**	1680	76.8	0.82	2.65	5.6	7.22	2.2	2.3	0.00254	21
1.73	**M2QA**	**90 L4A**	1668	78.3	0.82	3.54	5.6	9.9	2.5	2.5	0.00317	25
2.53	**M2QA**	**100 L4A**	1716	79.8	0.85	4.89	5.6	14.1	2.4	2.5	0.00679	32
3.45	**M2QA**	**100 L4B**	1704	81.7	0.87	6.37	6.2	19.3	2.3	2.7	0.00862	36
4.6	**M2QA**	**112 M4A**	1704	84.2	0.86	8.34	6.2	25.8	2.3	2.7	0.01306	45
6.33	**M2QA**	**132 S4A**	1704	85.3	0.88	11.07	6.2	35.5	2.4	2.5	0.02673	60
8.6	**M2QA**	**132 M4A**	1716	87.2	0.85	15.23	6.2	47.9	2.5	2.7	0.03432	73
12.7	**M2QA**	**160 M4A**	1752	88.3	0.89	21.21	6.2	69	2.4	2.8	0.06543	116
17.3	**M2QA**	**160 L4A**	1752	89.3	0.90	28.25	6.2	94	2.3	2.4	0.09349	137
21	**M2QA**	**180 M4A**	1764	90.7	0.89	34.62	6.2	115	2.1	2.4	0.16049	170
25.3	**M2QA**	**180 L4A**	1764	90.7	0.91	40.22	6.2	137	2.2	2.6	0.18046	186
34.5	**M2QA**	**200 L4A**	1758	90.8	0.91	54	6.2	187	2.1	2.4	0.2819	254
42.6	**M2QA**	**225 S4A**	1770	91.7	0.86	70	6.7	230	2.1	2.4	0.37	308
51.8	**M2QA**	**225 M4A**	1770	92.2	0.89	82	6.7	279	2.1	2.3	0.42	335
63	**M2QA**	**250 M4A**	1776	92.3	0.88	101	6.7	339	2.4	2.4	0.78	450
86	**M2BAT**	**280 SMA**	1779	93.8	0.86	141	6.0	462	1.8	2.3	1.05	560
102	**M2BAT**	**280 SMB**	1778	94.2	0.86	166	6.0	548	1.8	2.2	1.32	600
125	**M2BAT**	**315 SMA**	1784	94.0	0.86	204	6.0	669	1.4	2.1	1.9	800
152	**M2BAT**	**315 SMB**	1782	94.4	0.86	248	5.6	815	1.6	2.1	2.2	855
185	**M2BAT**	**315 SMC**	1783	94.9	0.86	298	6.1	991	1.7	2.4	2.6	930
230	**M2BAT**	**315 MLA**	1782	95.2	0.86	367	6.0	1233	1.8	2.2	3.2	1030
288	**M2BAT**	**355 S**	1786	95.3	0.86	466	6.0	1540	1.6	2.3	5.4	1500
1800 r/min = 4 poles			**440 V 60 Hz**					**High-output design**				
6.33	**M2QA**	**112 L4A**	1720	84.5	0.86	11.42	6.7	35.1	2.3	2.7	0.01484	49
9.43	**M2QA**	**132 M4B**	1720	87.4	0.85	16.66	6.2	52	2.4	2.6	0.0347	75
10.6	**M2QA**	**132 M4C**	1730	88.0	0.85	18.66	6.7	58	2.5	2.7	0.04227	80
19.6	**M2QA**	**160 L4B**	1750	89.3	0.90	32	6.2	107	2.3	2.4	0.10686	147
28.8	**M2QA**	**180 L4B**	1765	90.7	0.90	46.21	6.0	156	2.0	2.5	0.20783	200
40.3	**M2QA**	**200 L4B**	1770	90.8	0.91	64	6.2	217	2.1	2.4	0.29715	277
58.7	**M2QA**	**225 M4B**	1780	92.2	0.89	94	6.7	315	2.1	2.3	0.6244	351
71.3	**M2QA**	**250 M4B**	1775	92.3	0.88	115	6.7	384	2.1	2.1	0.9125	485
125	**M2BAT**	**280 SMC**	1781	94.8	0.87	200	6.8	670	2.4	2.6	1.7	660

Marine cast iron motors

Technical data, Non-Essential Services

IP 55 - IC 411 - temperature rise 90 K

Output kW	Motor type		Product code		Speed r/min	Effi-ciency %	Power factor cos φ	Current I_N A	Current I_s / I_N	Torque T_N Nm	Torque T_s / T_N	Torque T_{max} / T_N
1000 r/min = 6 poles					**380 V 50 Hz**				**Basic design**			
0.18	**M2QA**	**71 M6A**	3GQA	073 301-••A	905	55.5	0.65	0.76	4.0	1.9	1.8	1.8
0.25	**M2QA**	**71 M6B**	3GQA	073 302-••A	885	60.0	0.65	0.97	4.0	2.7	1.8	1.8
0.37	**M2QA**	**80 M6A**	3GQA	083 301-••A	930	63.0	0.70	1.27	4.5	3.8	1.9	2.0
0.55	**M2QA**	**80 M6B**	3GQA	083 302-••A	925	64.5	0.72	1.8	4.5	5.68	1.8	1.9
0.75	**M2QA**	**90 S6A**	3GQA	093 101-••A	920	71.0	0.78	2.06	4.5	7.79	2.1	2.2
1.1	**M2QA**	**90 L6A**	3GQA	093 501-••A	920	73.0	0.78	2.94	4.5	11.4	2.2	2.3
1.5	**M2QA**	**100 L6A**	3GQA	103 501-••A	930	76.0	0.80	3.75	5.2	15.4	2.1	2.2
2.2	**M2QA**	**112 M6A**	3GQA	113 301-••A	935	78.5	0.78	5.46	5.2	22.5	1.9	2.1
3	**M2QA**	**132 S6A**	3GQA	133 101-••A	955	82.0	0.81	6.86	6.1	30	2.2	2.4
4	**M2QA**	**132 M6A**	3GQA	133 301-••A	955	84.0	0.81	8.93	6.1	40	2.5	2.8
5.5	**M2QA**	**132 M6B**	3GQA	133 302-••A	945	85.5	0.82	11.92	6.1	56	2.5	2.8
7.5	**M2QA**	**160 M6A**	3GQA	163 301-••A	970	87.5	0.80	16.28	5.6	73	2.1	2.2
11	**M2QA**	**160 L6A**	3GQA	163 501-••A	970	88.0	0.81	23.45	5.6	108	2.2	2.3
15	**M2QA**	**180 L6A**	3GQA	183 501-••A	980	89.0	0.84	30.49	5.6	146	2.1	2.2
18.5	**M2QA**	**200 L6A**	3GQA	203 501-••A	975	90.0	0.84	37.18	5.6	181	2.1	2.2
22	**M2QA**	**200 L6B**	3GQA	203 502-••A	975	90.0	0.84	44.21	5.6	215	2.0	2.2
30	**M2QA**	**225 M6A**	3GQA	223 301-••A	980	90.8	0.83	60	6.2	292	2.1	2.3
37	**M2QA**	**250 M6A**	3GQA	253 301-••A	980	91.5	0.90	68	6.4	361	2.1	2.3
45	**M2BAT**	**280 SMA**	3GBA	283 210-••D	988	93.9	0.83	89	6.1	435	2.1	2.1
55	**M2BAT**	**280 SMB**	3GBA	283 220-••D	987	93.5	0.84	108	5.8	532	2.1	2.2
75	**M2BAT**	**315 SMA**	3GBA	313 210-••D	990	94.1	0.82	148	5.9	723	1.7	2.1
90	**M2BAT**	**315 SMB**	3GBA	313 220-••D	990	95.7	0.84	174	5.9	868	1.7	2.0
110	**M2BAT**	**315 SMC**	3GBA	313 230-••D	990	94.9	0.83	215	6.0	1061	1.8	2.3
132	**M2BAT**	**315 MLA**	3GBA	313 410-••D	989	95.1	0.83	255	5.8	1275	1.9	2.2
160	**M2BAT**	**355 S**	3GBA	353 100-••D	991	95.2	0.83	307	5.7	1542	1.6	2.0
1000 r/min = 6 poles					**380 V 50 Hz**				**High-output design**			
3	**M2QA**	**112 M6B**	3GQA	113 302-••A	940	79.5	0.78	7.35	5.5	30.5	2.0	2.1
6.5	**M2QA**	**132 M6C**	3GQA	133 303-••A	945	86.0	0.82	14	6.2	65	2.5	2.0
13	**M2QA**	**160 L6B**	3GQA	163 502-••A	965	88.5	0.80	27.9	6.2	129	2.2	2.3
17.5	**M2QA**	**180 L6B**	3GQA	183 502-••A	970	89.5	0.83	35.79	6.2	172	2.3	2.4
30	**M2QA**	**200 L6C**	3GQA	203 503-••A	975	90.5	0.83	60	5.9	294	2.0	2.2
35	**M2QA**	**225 M6B**	3GQA	223 302-••A	985	90.8	0.83	70	7.4	339	2.4	2.5
45	**M2QA**	**250 M6B**	3GQA	253 302-••A	970	91.5	0.88	84	6.9	443	2.2	2.4
75	**M2BAT**	**280 SMC**	3GBA	283 230-••D	987	94.3	0.84	144	6.4	726	2.3	2.3

The bullets in the product code indicate choice of mounting arrangement, voltage and frequency, generation code

(see ordering information page).

Marine cast iron motors

Technical data, Non-Essential Services

IP 55 - IC 411 - temperature rise 90 K

Output kW	Motor type		Speed r/min	Effi-ciency %	Power factor cos φ	Current I_N A	Current I_s / I_N	Torque T_N Nm	Torque T_s / T_N	Torque T_{max} / T_N	Moment of inertia J=1/4 GD² kgm²	Weight kg
1200 r/min = 6 poles			**440 V 60 Hz**					**Basic design**				
0.21	**M2QA**	**71 M6A**	1090	55.0	0.66	0.76	4.0	1.84	1.8	1.8	0.00056	10
0.29	**M2QA**	**71 M6B**	1070	55.0	0.66	0.76	4.0	1.84	1.8	1.8	0.00074	11
0.43	**M2QA**	**80 M6A**	1116	62.8	0.71	1.27	4.6	3.68	1.9	2.0	0.00159	17
0.63	**M2QA**	**80 M6B**	1110	64.4	0.73	1.76	4.6	5.42	1.8	1.9	0.00196	18
0.86	**M2QA**	**90 S6A**	1104	70.7	0.79	2.02	4.6	7.44	2.1	2.2	0.00292	21
1.27	**M2QA**	**90 L6A**	1104	72.8	0.79	2.9	4.6	11	2.2	2.3	0.00379	25
1.73	**M2QA**	**100 L6A**	1116	75.7	0.81	3.7	5.3	14.8	2.1	2.2	0.00999	32
2.53	**M2QA**	**112 M6A**	1122	78.3	0.79	5.37	5.3	21.5	1.9	2.1	0.03116	40
3.45	**M2QA**	**132 S6A**	1146	81.8	0.82	6.75	6.2	28.8	2.2	2.4	0.03116	60
4.6	**M2QA**	**132 M6A**	1146	83.7	0.82	8.79	6.2	38.3	2.5	2.8	0.04074	65
6.33	**M2QA**	**132 M6B**	1134	85.3	0.83	11.73	6.2	53	2.5	2.8	0.05332	75
8.6	**M2QA**	**160 M6A**	1164	87.3	0.81	15.96	5.7	70	2.1	2.2	0.09231	119
12.7	**M2QA**	**160 L6A**	1164	87.8	0.82	23.15	5.7	104	2.2	2.3	0.1297	140
17.3	**M2QA**	**180 L6A**	1176	88.7	0.85	30.11	5.7	140	2.1	2.2	0.2418	180
21.3	**M2QA**	**200 L6A**	1170	89.7	0.85	36.66	5.7	174	2.1	2.2	0.34174	231
25.3	**M2QA**	**200 L6B**	1170	89.8	0.85	43.49	5.7	207	2.0	2.2	0.46837	254
34.5	**M2QA**	**225 M6A**	1176	90.6	0.84	59	6.3	280	2.1	2.2	0.62691	308
42.6	**M2QA**	**250 M6A**	1176	91.3	0.91	67	6.5	346	2.1	2.3	0.97	382
52	**M2BAT**	**280 SMA**	1187	93.2	0.83	88	6.3	418	2.1	2.2	1.6	540
63	**M2BAT**	**280 SMB**	1186	93.5	0.84	106	6.0	507	2.0	2.2	1.9	580
86	**M2BAT**	**315 SMA**	1190	94.0	0.83	146	6.1	690	1.6	2.1	2.8	780
103	**M2BAT**	**315 SMB**	1190	94.6	0.84	170	6.1	827	1.6	2.1	3.6	870
125	**M2BAT**	**315 SMC**	1189	94.9	0.83	208	6.5	1004	1.8	2.3	4.4	930
152	**M2BAT**	**315 MLA**	1189	95.0	0.84	253	6.0	1221	1.9	2.2	5.3	1040
185	**M2BAT**	**355 S**	1191	95.2	0.83	309	5.6	1483	1.5	2.0	7.3	1500
1200 r/min = 6 poles			**440 V 60 Hz**					**High-output design**				
3.45	**M2QA**	**112 M6B**	1140	79.5	0.79	7.21	6.0	28.9	2.0	2.2	0.0199	45
7.48	**M2QA**	**132 M6C**	1145	86.0	0.82	13.9	7.0	62	2.5	2.8	0.0611	75
14.6	**M2QA**	**160 L6B**	1165	88.3	0.81	26.7	6.3	119	2.2	2.3	0.139	155
19.6	**M2QA**	**180 L6B**	1175	89.2	0.84	34.3	6.3	159	2.3	2.4	0.283984	196
34.5	**M2QA**	**200 L6C**	1170	89.9	0.85	59	6.0	281	2.0	2.2	0.495	291
39.2	**M2QA**	**225 M6B**	1175	90.6	0.84	67	7.5	318	2.4	2.5	0.803267	351
51.75	**M2QA**	**250 M6B**	1176	91.3	0.91	81	7.0	420	2.2	2.4	1.32	455
86	**M2BAT**	**280 SMC**	1187	94.3	0.84	144	6.5	692	2.2	2.3	2.6	660

Marine cast iron motors

Technical data, Non-Essential Services

IP 55 - IC 411 - temperature rise 90 K

Output kW	Motor type		Product code		Speed r/min	Effi-ciency %	Power factor cos φ	Current I_N A	Current I_s / I_N	Torque T_N Nm	Torque T_s / T_N	Torque T_{max} / T_N
750 r/min = 8 poles					**380 V 50 Hz**				**Basic design**			
0.75	**M2QA**	**100 L8A**	3GQA	104 501-••A	700	69.0	0.68	2.43	4.2	10.2	2.0	2.0
1.1	**M2QA**	**100 L8B**	3GQA	104 502-••A	700	70.0	0.70	3.41	4.2	15	2.1	2.3
1.5	**M2QA**	**112 M8A**	3GQA	114 301-••A	695	74.5	0.70	4.37	4.2	20.61	2.0	2.1
2.2	**M2QA**	**132 S8A**	3GQA	134 101-••A	705	80.0	0.75	5.57	5.2	29.8	2.2	2.4
3	**M2QA**	**132 M8A**	3GQA	134 301-••A	705	81.0	0.79	7.12	5.2	40.6	2.0	2.3
4	**M2QA**	**160 M8A**	3GQA	164 301-••A	715	84.0	0.77	9.4	5.2	53	2.1	2.5
5.5	**M2QA**	**160 M8B**	3GQA	164 302-••A	720	85.5	0.78	12.53	5.2	73	2.3	2.6
7.5	**M2QA**	**160 L8A**	3GQA	164 501-••A	720	86.0	0.78	16.99	5.2	99	2.2	2.4
11	**M2QA**	**180 L8A**	3GQA	184 501-••A	725	87.0	0.80	24.01	5.1	144	1.8	2.2
15	**M2QA**	**200 L8A**	3GQA	204 501-••A	725	88.9	0.79	32.45	5.2	198	2.2	2.2
18.5	**M2QA**	**225 S8A**	3GQA	224 101-••A	740	89.9	0.76	41.14	5.2	239	2.0	2.2
22	**M2QA**	**225 M8A**	3GQA	224 301-••A	740	90.0	0.77	48.23	5.6	284	2.0	2.2
30	**M2QA**	**250 M8A**	3GQA	254 301-••A	740	91.0	0.81	61	6.1	387	2.2	3.0
37	**M2BAT**	**280 SMA**	3GBA	284 210-••D	740	93.2	0.80	75	6.8	477	1.6	2.7
45	**M2BAT**	**280 SMB**	3GBA	284 220-••D	740	93.8	0.80	92	7.1	580	1.7	2.9
55	**M2BAT**	**315 SMA**	3GBA	314 210-••D	739	93.9	0.83	108	6.5	711	1.4	2.4
75	**M2BAT**	**315 SMB**	3GBA	314 220-••D	739	94.3	0.83	146	6.6	969	1.5	2.4
90	**M2BAT**	**315 SMC**	3GBA	314 230-••D	739	94.6	0.84	173	6.8	1163	1.6	2.4
110	**M2BAT**	**315 MLA**	3GBA	314 410-••D	739	94.9	0.84	209	6.7	1421	1.6	2.4
132	**M2BAT**	**355 S**	3GBA	354 100-••D	742	94.9	0.82	258	5.8	1699	1.1	2.1
750 r/min = 8 poles					**380 V 50 Hz**				**High-output design**			
2	**M2QA**	**112 M8B**	3GQA	114 302-••A	700	76.0	0.70	5.71	4.4	27.29	2.0	2.1
3.8	**M2QA**	**132 M8B**	3GQA	134 302-••A	700	81.5	0.79	8.97	5.5	52	2.0	2.3
8.5	**M2QA**	**160 L8B**	3GQA	164 502-••A	720	86.0	0.77	19.5	5.5	112	2.2	2.4
13.2	**M2QA**	**180 L8B**	3GQA	184 502-••A	730	87.5	0.79	29.01	5.5	172	1.9	2.3
18.5	**M2QA**	**200 L8B**	3GQA	204 502-••A	735	89.9	0.78	40.08	5.7	240	2.2	2.2
27	**M2QA**	**225 M8B**	3GQA	224 302-••A	735	90.0	0.77	59	6.0	350	2.1	2.3
37	**M2QA**	**250 M8B**	3GQA	254 302-••A	730	91.0	0.81	76	6.2	484	2.2	2.4
55	**M2BAT**	**280 SMC**	3GBA	284 230-••D	740	94.2	0.81	110	7.3	709	1.7	2.9

The bullets in the product code indicate choice of mounting arrangement, voltage and frequency, generation code

(see ordering information page).

Marine cast iron motors

Technical data, Non-Essential Services

IP 55 - IC 411 - temperature rise 90 K

Output kW	Motor type		Speed r/min	Effi-ciency %	Power factor cos φ	Current I_N / A	Current I_s / I_N	Torque T_N / Nm	Torque T_s / T_N	Torque T_{max} / T_N	Moment of inertia J=1/4 GD² kgm²	Weight kg
900 r/min = 8 poles			**440 V 60 Hz**					**Basic design**				
0.86	**M2QA**	**100 L8A**	840	68.8	0.69	2.38	4.3	9.78	2.0	2.0	0.00971	31
1.27	**M2QA**	**100 L8B**	840	69.7	0.71	3.37	4.3	14.4	2.1	2.3	0.01186	34
1.73	**M2QA**	**112 M8A**	834	74.3	0.71	4.3	4.3	19.8	2.0	2.1	0.01559	42
2.53	**M2QA**	**132 S8A**	846	79.8	0.76	5.47	5.3	28.6	2.2	2.4	0.03625	56
3.65	**M2QA**	**132 M8A**	946	80.7	0.80	7.01	5.3	36.9	2.0	2.3	0.04141	64
4.6	**M2QA**	**160 M8A**	864	83.8	0.78	9.23	5.3	50	2.1	2.5	0.0676	105
6.33	**M2QA**	**160 M8B**	864	85.3	0.79	12.33	5.3	70	2.3	2.6	0.09524	125
8.6	**M2QA**	**160 L8A**	864	85.7	0.79	16.67	5.3	95	2.2	2.4	0.12122	142
12.7	**M2QA**	**180 L8A**	876	87.8	0.81	23.43	5.2	138	1.8	2.2	0.23645	176
17.3	**M2QA**	**200 L8A**	870	88.7	0.80	31.99	5.3	190	2.2	2.2	0.37103	235
21.3	**M2QA**	**225 S8A**	888	89.7	0.77	40.47	5.3	229	2.0	2.2	0.53287	290
25.3	**M2QA**	**225 M8A**	888	89.8	0.78	47.4	5.7	272	2.0	2.2	0.65825	302
34.5	**M2QA**	**250 M8A**	888	90.7	0.82	60	6.2	371	2.2	3.0	0.975	392
43	**M2BAT**	**280 SMA**	890	93.9	0.81	75	6.7	461	1.4	2.6	1.85	570
55	**M2BAT**	**280 SMB**	889	93.9	0.82	95	6.8	591	1.5	2.7	2.2	610
63	**M2BAT**	**315 SMA**	889	94.1	0.83	107	6.5	677	1.4	2.4	3.2	820
85	**M2BAT**	**315 SMB**	889	94.5	0.84	141	6.6	913	1.5	2.4	4.1	910
105	**M2BAT**	**315 SMC**	889	94.8	0.84	172	6.7	1128	1.5	2.3	4.9	980
125	**M2BAT**	**315 MLA**	889	95.1	0.84	203	6.8	1343	1.6	2.4	5.8	1100
150	**M2BAT**	**355 S**	892	95.0	0.82	254	5.8	1606	1.0	2.1	7.3	1500
900 r/min = 8 poles			**440 V 60 Hz**					**High-output design**				
2.3	**M2QA**	**112 M8B**	835	75.8	0.71	5.6	4.5	26.3	2.0	2.1	0.0199	45
4.37	**M2QA**	**132 M8B**	846	81.7	0.80	8.8	5.6	49.3	2.0	2.3	0.04776	75
9.78	**M2QA**	**160 L8B**	865	85.7	0.78	192	5.6	107	2.2	2.4	0.1312	136
15.2	**M2QA**	**180 L8B**	875	88.8	0.80	28	5.6	165	1.9	2.3	0.283984	196
21.3	**M2QA**	**200 L8B**	870	89.7	0.79	39.4	5.8	233	2.2	2.2	0.46854	274
31	**M2QA**	**225 M8B**	888	89.8	0.78	58	6.1	333	2.1	2.3	0.803267	349
42.6	**M2QA**	**250 M8B**	888	90.7	0.82	75	6.3	457	2.2	2.4	1.28	436
65	**M2BAT**	**280 SMC**	889	94.6	0.82	110	7.1	698	1.5	2.8	2.85	690

Marine cast iron motors - Variant codes

Code [1]	Variant	Motor size							Motor size		
		M2BA 71-132	M3BP 160-180	M3BP 200-250	M3BP 280-315	M3BP 355	M3BP 400	M3BP 450	M2QA 71-132	M2QA 160-250	M2BAT 280-355
Balancing											
052	Vibration acc. to grade A (IEC 60034-14).	M	S	S	S	S	S	S	P	M	S
417	Vibration acc. to grade B (IEC 60034-14).	M	P	P	P	P	P	P	M	R	NA
423	Balanced without key.	NA	P	P	P	P	P	P	NA	NA	NA
424	Full key balancing.	M	P	P	P	P	P	P	M	M	NA
Bearings and lubrication											
036	Transport lock for bearings.	NA	M	M	M	M	NA	NA	NA	M	M
037	Roller bearing at D-end.	NA	M	M	M	M	NA	NA	NA	M	M
039	Cold resistant grease 71-132 -30... +120°C, 160-400 -55... +100°C	M	M	M	M	M	NA	NA	M	M	M
040	Heat resistant grease (-25...+150°C).	M	S	S	M	M	P	P	M	M	M
041	Bearings regreasable via grease nipples. M2QA/M2BA 132 on modification. M2QA 160-225 on modification, size 250 standard.	NA/M	S	S	S	S	S	S	NA/M	M/S	S
042	Locked drive-end.	S	S	S	S	S	S	S	S	S	NA
043	SPM nipples. Frame sizes 112-132 only foot mounted B3.	NA/M	S	S	S	S	S	S	NA/M	M	M/S
057	2RS bearings at both ends. Grease for bearing temperatures -20... +110°C.	S	M	M	NA	NA	NA	NA	S	NA	NA
058	Angular contact bearing at D-end, shaft force away from bearing	NA	M	M	P	P	P	P	NA	NA	NA
059	Angular contact bearing at N-end, shaft force towards bearing	NA	R	R	P	P	P	P	NA	NA	NA
060	Angular contact bearing at D-end, shaft force towards bearing.	NA	NA	NA	P	P	P	P	NA	NA	NA
061	Angular contact bearing at N-end, shaft force away from bearing.	NA	NA	NA	P	P	P	P	NA	NA	NA
107	Pt-100 2-wire in bearings.	NA	P	P	M	M	P	P	NA	NA	NA
130	Pt-100 3-wire in bearings.	NA	NA	NA	M	M	P	P	NA	NA	NA
194	2Z-bearings greased for life at both ends.	NA	M	M	NA	NA	NA	NA	NA	S	NA
420	Bearing mounted PTC-thermistors.	NA	R	R	P	P	P	P	NA	NA	NA
433	Outlet grease collector (with hand pump).	NA	NA	NA	P	P	P	P	NA	NA	NA
796	Grease nipples JIS B 1575 Pt 1/8 Type A. Stainless steel. Head type to be defined when ordering.	NA	M	M	M	M	P	P	NA	NA	NA
797	Stainless steel SPM nipples.	NA	M	M	M	M	P	P	NA	NA	M
798	Stainless steel grease nipples.	NA	M	M	M	M	P	P	NA	NA	M
Branch standard designs											
178	Stainless steel/acid proof bolts.	M	M	M	M	M	P	P	M	M	M
204	Jacking bolts for foot mounted motors.	NA	NA	NA	P	P	P	P	NA	NA	NA
209	Non-standard voltage or frequency (special winding).	M	P	P	P	P	P	P	M	M	NA
425	Corrosion protected stator and rotor core. Frame sizes 71-132, only rotor as standard).	M	P	P	P	P	P	P	M	M	S
785	Reinforced tropicalisation.	S	P	P	NA	NA	NA	NA	R	R	R

[1] Certain variant codes cannot be used simultaneously.

S = Included as standard.
M = On modification of a stocked motor, or on new manufacture, the number per order may be limited.
P = New manufacture only.
R = On request.
NA = Not applicable.

Code [1]	Variant	Motor size							Motor size		
		M2BA 71-132	M3BP 160-180	M3BP 200-250	M3BP 280-315	M3BP 355	M3BP 400	M3BP 450	M2QA 71-132	M2QA 160-250	M2BAT 280-355
Cooling system											
044	Unidirectional fan, clockwise seen from D-end. For 2 pole motors only.	NA	NA	NA	P	P	P	P	NA	NA	NA
045	Unidirectional fan, counter clockwise seen from D-end. For 2 pole motors only.	NA	NA	NA	P	P	P	P	NA	NA	NA
068	Metal fan.	M	M	M	M	M	P	P	M	M	M
075	Cooling method IC 418 (without fan). Out put on request for sizes 160-250.	R	M	M	R	R	NA	NA	NA	NA	NA
183	Separate motor cooling (fan axial, N-end).	P/M	M	M	P	P	P	P	P/M	M	NA
189	Separate motor cooling, IP44, 400 V 50 Hz, (fan axial, N-end).	NA	M	M	NA	NA	NA	NA	NA	NA	NA
422	Separate motor cooling (fan top or side, N-end).	NA	NA	NA	P	P	P	P	NA	NA	NA
790	Cast iron fan cover.	NA	NA	NA	NA	NA	NA	NA	NA	NA	NA
791	Stainless steel fan cover.	NA	R	R	P	P	P	P	NA	NA	NA
Coupling											
035	Assembly of customer supplied coupling-half	R	R	R	P	P	P	P	R	R	R
Dimension drawing											
141	Binding dimension drawing.	M	M	M	M	M	M	M	M	M	M
Drain holes											
065	Plugged existing drain holes.	NA	M	M	M	M	NA	NA	M	NA	M
076	Draining holes with plugs. Felt plugs.	M	NA	NA	S	S	S	S	M	M	S
448	Draining holes with metal plugs.	M	NA	NA	P	P	P	P	NA	NA	NA
Earthing bolt											
067	External earthing bolt.	M	S	S	S	S	S	S	M	M	S
Hazardous environments											
	See catalogue Motors for Hazardous Areas, BU/Ex-motors, for details.										
Heating elements											
450	Heating element, 100-120 V.	M	M	M	M	M	P	P	M	M	M
451	Heating element, 200-240 V.	M	M	M	M	M	P	P	M	M	M
Insulation system											
014	Winding insulation class H.	P	P	P	P	P	P	P	P	P	NA
405	Special winding insulation for frequency converter supply.	NA	P	P	P	P	P	P	P	P	NA
406	Winding for supply > 690 ≤ 1000 V.	NA	P	P	P	P	P	P	NA	NA	NA
Mounting arrangements											
008	IM 2101 foot/flange mounted, from IM 1001 (B34 from B3).	M	NA	NA	NA	NA	NA	NA	M	NA	NA
009	IM 2001 foot/flange mounted, from IM 1001 (B35 from B3).	M	M	M	M	M	M	M	M	M	M
047	IM 3601 flange mounted, IEC flange, from IM 3001 (B14 from B5).	M	R/NA	NA	NA	NA	NA	NA	M	M/NA	NA
048	IM 3001 flange mounted, IEC flange, from IM 3601 (B5 from B14)	M	NA	NA	NA	NA	NA	NA	M	NA	NA

[1] Certain variant codes cannot be used simultaneously.

S = Included as standard.
M = On modification of a stocked motor, or on new manufacture, the number per order may be limited.
P = New manufacture only.
R = On request.
NA = Not applicable.

4

Code [1]	Variant	Motor size							Motor size		
		M2BA 71-132	M3BP 160-180	M3BP 200-250	M3BP 280-315	M3BP 355	M3BP 400	M3BP 450	M2QA 71-132	M2QA 160-250	M2BAT 280-355
066	Modified for non-standard mounting position (please specify IM xxxx). (must be ordered for all mounting arrangements excluding IM B3 (1001) and B5 (3001).	NA	M	M	M	M	P	P	M	NA	M
078	IM 3601 flange mounted, DIN C-flange.	M/NA	NA	NA	NA	NA	NA	NA	M/NA	NA	NA
090	IM 2101 foot/flange mounted, DIN C-flange, from IM 1001, (B34 from B3).	M/NA	NA	NA	NA	NA	NA	NA	M/NA	NA	NA
305	Additional lifting lugs for V1, V3, V5, V6, V15 and V36.	NA	M	M	P	P	P	P	NA	NA	NA
Painting											
114	Special paint colour, standard grade. RAL-colour no. must be specified.	M	M	M	M	M	P	P	M	M	M
106	Paint thickness ≥ 80 µm.	NA	NA	NA	S	S	S	S	NA	NA	NA
109	Paint thickness ≥ 120 µm.	NA	NA	NA	P	P	P	P	NA	NA	NA
110	Paint thickness ≥ 160 µm.	NA	NA	NA	P	P	P	P	NA	NA	NA
111	Offshore two-pack polyamide cured epoxy paint 160 µm.	NA	NA	NA	P	P	P	P	NA	NA	NA
115	Offshore zink primer painting.	NA	R	R	P	P	P	P	NA	NA	NA
179	Special paint specification.	R	R	R	R	R	R	R	R	R	NA
Protection											
005	Metal protective roof, vertical motor, shaft down.	M	M	M	M	M	P	P	M	M	M
072	Radial seal at D-end. M2QA 250 as standard.	M	M	M	M	P	P	P	M	R/S	M
073	Sealed against oil at D-end.	R	M	M	M	M	P	P	P	R	P
158	Degree of protection IP65. Dust proof version.	M	M	M	M	M	P	P	M	M	NA
211	Weather protected, IPxxW.	P	P	P	P	P	P	P	M	M	NA
401	Protective roof, horizontal motor.	NA	M	M	R	R	R	R	NA	M	R
403	Degree of protection IP 56.	M	M	M	M	M	P	P	M	M	M
404	Degree of protection IP 56, without fan and fan cover.	NA	P	P	R	R	NA	NA	R	R	NA
783	Labyrinth sealing at D-end.	NA	R	R	P	S	S	S	NA	NA	NA
784	Gamma seal at D-end	S	S	S	NA	NA	NA	NA	S	S	M
Rating & instruction plates											
002	Restamping voltage, frequency and output, continuous duty.	M	M	M	M	M	P	P	M	M	M
003	Individual serial number.	M	S	S	S	S	S	S	S	S	S
004	Additional text on std rating plate (max 12 digits on free text line).	NA	M	M	M	M	P	P	NA	M	M
095	Restamping output (maintained voltage, frequency), intermittent duty.	M	M	M	M	M	P	P	M	M	M
135	Mounting of additional identification plate, stainless.	M	M	M	M	M	P	P	M	M	M
138	Mounting of additional identification plate, aluminum.	M	NA	NA	NA	NA	NA	NA	M	M	NA
139	Additional identification plate delivered loose.	M	M	M	M	M	P	P	M	M	M
160	Additional rating plate affixed.	M	M	M	M	M	P	P	M	M	M
161	Additional rating plate delivered loose.	M	M	M	M	M	P	P	M	M	M
163	Frequency converter rating plate. Rating data according to quotation.	NA	M	M	M	M	P	P	M	M	M

[1] Certain variant codes cannot be used simultaneously.

S = Included as standard.
M = On modification of a stocked motor, or on new manufacture, the number per order may be limited.
P = New manufacture only.
R = On request.
NA = Not applicable.

Code [1]	Variant	Motor size							Motor size		
		M2BA 71-132	M3BP 160-180	M3BP 200-250	M3BP 280-315	M3BP 355	M3BP 400	M3BP 450	M2QA 71-132	M2QA 160-250	M2BAT 280-355
Shaft and Rotor											
069	Two shaft extensions as per basic catalogue.	NA	P	P	P	P	P	P	NA	NA	NA
070	One or two special shaft extensions, standard shaft material.	P	R	R	P	P	P	P	P	P	NA
164	Shaft extension with closed key-way.	R	S	S	R	R	R	R	NA	NA	NA
165	Shaft extension with open key-way.	S	P	P	S	S	S	S	S	S	S
410	Stainless/acid proof steel shaft (standard or non-standard design).	NA	R	R	P	P	P	P	NA	NA	NA
Standards and regulations											
010	Fulfilling CSA Safety Certificate.	NA	M	M	NA	NA	NA	NA	NA	NA	NA
011	Fulfilling CSA Energy Efficiency Verification (code 010 included).	NA	R	R	NA	NA	NA	NA	NA	NA	NA
024	Fulfilling Bureau Veritas (BV) requirements, Essential Service.	NA	M	M	P	P	P	R	NA	NA	NA
025	Fulfilling Det Norske Veritas (DNV) requirements, Essential Service	M	M	M	P	P	P	R	M	M	NA
026	Fulfilling Lloyds Register of Shipping (LR) requirements, Essential Service.	M	M	M	P	P	P	R	M	M	NA
027	Fulfilling American Bureau of Shipping (ABS requirements, Essential Service.	M	M	M	P	P	P	R	M	M	NA
049	Fulfilling Germanischer Lloyd (GL) requirements, Essential Service.	M	M	M	P	P	P	R	M	M	NA
050	Fulfilling Registro Italiano Navale (RINA) requirements, Essential Service.	NA	M	M	P	P	P	R	NA	NA	NA
051	Fulfilling Russian Maritime Register of Shipping (RS) requirements, Essential Service. For frame sizes 112 to 132 on modification.	R	M	M	P	P	P	R	R	R	NA
096	Fulfilling Lloyds Register of Shipping (LR) requirements, Non-Essential Service	M	NA	M	P	P	P	R	M	M	M
186	Fulfilling Det Norske Veritas (DNV) requirements, Non-Essential Service	M	NA	M	M	M	P	R	M	M	M
481	Fulfilling Nippon Kaiji Kyokai (NK) requirements, Essential Service.	R	M	M	P	P	P	R	R	R	NA
483	Fulfilling China Classification Societies (CCS) requirements (Beijing), Essential Service.	M	M	M	P	P	P	R	M	M	NA
484	Fulfilling Korea Register of Shipping (KR) requirements, Essential Service.	R	M	M	P	P	P	R	R	R	NA
485	Fulfilling China Corporational Register of Shipping (CR) requirements (Taipei), Essential Service.	R	M	M	NA	NA	NA	NA	R	R	NA
491	Fulfilling Nippon Kaiji Kyokai (NK) requirements, Non-Essential Service.	R	M	M	M	M	P	R	R	R	M
492	Fulfilling Registro Italiano Navale (RINA) requirements, Non-Essential Service.	M	M	M	M	M	P	R	M	M	M
493	Fulfilling China Classification Societies (CCS) Requirements (Beijing), Non-Essential Service.	M	M	M	P	P	P	R	M	M	NA
494	Fulfilling Korea Register of Shipping (KR) requirements, Non-Essential Service.	R	M	M	M	M	P	R	R	R	M
495	Fulfilling China Corporational Register of Shipping (CR) requirements (Taipei), Non-Essential Service.	R	M	M	NA	NA	NA	NA	R	R	NA

[1] Certain variant codes cannot be used simultaneously.

S = Included as standard.
M = On modification of a stocked motor, or on new manufacture, the number per order may be limited.
P = New manufacture only.
R = On request.
NA = Not applicable.

4

Code [1]	Variant	Motor size							Motor size		
		M2BA 71-132	M3BP 160-180	M3BP 200-250	M3BP 280-315	M3BP 355	M3BP 400	M3BP 450	M2QA 71-132	M2QA 160-250	M2BAT 280-355
496	Fulfilling Bureau Veritas (BV) requirements, Non-Essential Service.	M	M	M	M	M	P	R	M	M	M
497	Fulfilling Russian Maritime Register of Shipping (RS) requirements, Non-Essential Service.	M	M	M	P	P	P	R	R	R	NA
773	EEMUA No 132 1988 design.	NA	R	R	R	R	R	R	NA	NA	NA
774	Design according to NORSOK (North Sea Territorial Waters).	R	R	R	P	R	R	R	R	R	NA
775	Design according to SHELL DEP 33.66.05.31 -Gen. January 1999 design.	M	P	P	P	R	R	R	NA	NA	NA
778	GOST R Export/Import Certificate (Russia)	NA	M	M	NA	NA	NA	NA	NA	NA	NA
779	SASO Export/Import Certificate (Saudi Arabia)	M	M	M	NA	NA	NA	NA	M	M	NA
Stator winding temperature sensors											
120	KTY 84-130 (1 per phase) in stator winding).	NA	NA	NA	P	P	P	P	NA	NA	NA
121	Bimetal detectors, break type (NCC), (3 in series), 130°C, in stator winding.	M	M	M	P	P	P	P	M	M	M
122	Bimetal detectors, break type (NCC), (3 in series), 150°C, in stator winding.	M	M	M	P	P	P	P	M	M	M
123	Bimetal detectors, break type (NCC), (3 in series), 170°C, in stator winding.	M	M	M	P	P	P	P	M	M	M
124	Bimetal detectors, break type (NCC), (2x3 in series), 140°C, in stator winding.	NA	M	M	P	P	P	P	NA	M	M
125	Bimetal detectors, break type (NCC), (2x3 in series), 150°C, in stator winding.	M	M	M	P	P	P	P	M	M	M
127	Bimetal detectors, break type (NCC), (3 in series, 130°C and 3 in series, 150°C), in stator winding.	M	M	M	P	P	P	P	M	M	M
321	Bimetal detectors, closing type (NO), (3 in parallel), 130°C, in stator winding.	M	R	R	NA	NA	NA	NA	M	M	M
322	Bimetal detectors, closing type (NO), (3 in parallel), 150°C, in stator winding.	M	R	R	NA	NA	NA	NA	M	M	M
323	Bimetal detectors, closing type (NO), (3 in parallel), 170°C, in stator winding.	M	R	R	NA	NA	NA	NA	M	M	M
325	Bimetal detectors, closing type (NO), (2x3 in parallel), 150°C, in stator winding.	M	R	R	NA	NA	NA	NA	M	M	M
327	Bimetal detectors, closing type (NO), (3 in parallel, 130°C, & 3 in parallel 150°C), in stator winding.	M	R	R	NA	NA	NA	NA	M	M	M
435	PTC-thermistors (3 in series), 130°C, in stator winding.	M	M	M	M	M	P	P	M	M	M
436	PTC-thermistors (3 in series), 150°C, in stator winding.	S	S	S	S	S	S	S	M	S	S
437	PTC-thermistors (3 in series), 170°C, in stator winding.	M	M	M	M	M	P	P	M	M	M
439	PTC-thermistors (2x3 in series), 150°C, in stator winding.	M	M	M	M	M	P	P	M	M	M
441	PTC-thermistors (3 in series, 130°C & 3 in series,150°C), in stator winding.	M	M	M	M	M	P	P	M	M	M
442	PTC-thermistors (3 in series, 150°C & 3 in series,170°C), in stator winding.	M	M	M	M	M	P	P	M	M	M

[1] Certain variant codes cannot be used simultaneously.

S = Included as standard.
M = On modification of a stocked motor, or on new manufacture, the number per order may be limited.
P = New manufacture only.
R = On request.
NA = Not applicable.

Code [1]	Variant	Motor size							Motor size		
		M2BA 71-132	M3BP 160-180	M3BP 200-250	M3BP 280-315	M3BP 355	M3BP 400	M3BP 450	M2QA 71-132	M2QA 160-250	M2BAT 280-355
445	Pt-100 2-wire in stator winding, 1 per phase. Not possible for size 71.	NA/M	M	M	M	M	P	P	NA/M	M	M
446	Pt-100 2-wire in stator winding, 2 per phase. Not possible for sizes 71-90.	NA/M	M	M	M	M	P	P	NA/M	M	M
502	Pt-100 3 wire in stator winding, 1 per phase.	NA	NA	NA	M	M	P	P	NA	NA	NA
503	Pt-100 3 wire in stator winding, 2 per phase.	NA	NA	NA	M	M	P	P	NA	NA	NA
Terminal box											
015	Motor supplied in D-connection.	M	M	M	NA	NA	NA	NA	M	M	NA
017	Motor supplied in Y-connection.	M	M	M	NA	NA	NA	NA	M	M	NA
019	Larger than standard terminal box.	NA	NA	NA	P	P	P	NA	NA	NA	NA
021	Terminal box LHS, seen from D-end (= L prod.code)	NA/P	P	P	P	P	P	NA	NA/P	P	NA
022	Cable entry LHS (seen from D-end).	M	M	M	M	M	P	P	NA	NA	NA
180	Terminal box RHS, seen from D-end (= R prod.code)	NA/P	P	P	P	P	P	NA	NA/P	P	NA
137	Extended cable connection, low terminal box, 'Flying leads'.	R	NA	NA	NA	NA	NA	NA	R	R	NA
413	Extended cable connection, no terminal box.	NA	NA	NA	P	P	P	NA	NA	NA	NA
157	Terminal box degree of protection IP 65.	M	M	M	S	S	S	NA	M	M	M
230	Standard metal cable glands.	M	M	M	S	S	S	P	M	M	S
231	Standard cable glands with clamping device.	M	R	R	P	P	P	P	M	M	NA
400	4 x 90 degr turnable terminal box.	S	S	S	S	S	NA	NA	S	M	NA
402	Terminal box adapted for AL cables.	NA	NA	NA	S	S	S	S	NA	NA	NA
409	Large terminal box with two terminal blocks.	NA	NA	NA	P	NA	NA	NA	NA	NA	NA
418	Separate terminal box for auxiliaries, standard material.	M	M	M	P	P	P	P	NA	R	M
466	Terminal box at N-end.	R	R	R	P	P	P	P	M	M	R
467	Lower than standard terminal box and rubber extended cable. Cable, length 2 m, included.	R	P	P	NA	NA	NA	NA	R	R	NA
468	Cable entry from D-end.	M	R	R	M	M	P	NA	M	M	NA/R
469	Cable entry from N-end.	M	M	M	M	M	P	NA	M	M	NA/R
380	Separate terminal box for temperature detectors, standard material.	NA	NA	NA	M	M	P	P	NA	NA	NA
567	Separate terminal box material: cast iron.	NA	NA	NA	M	M	P	P	NA	NA	NA
568	Separate terminal box for heating elements, standard material.	R	R	R	P	P	P	P	NA	NA	NA
569	Separate terminal box for brakes.	NA	R	R	P	P	P	P	NA	NA	NA
447	Top mounted separate terminal box for monitoring equipment.	R	R	R	M	M	NA	NA	NA	NA	NA
729	Cable flanges without holes/ Blank gland plates, aluminum.	NA	M	M	M	M	NA	NA	M	NA	M
731	Two standard metal cable glands.	M	M	M	S	S	S	S	M	M	S
743	Painted steel flange for cable glands (blind plate).	NA	M	M	M	M	P	P	NA	NA	M
744	Stainless steel flange for cable glands (blind plate).	NA	M	M	M	M	P	P	NA	NA	M
745	Painted steel flange equipped with brass cable glands.	NA	R	R	M	M	P	P	NA	NA	M
753	Cast iron terminal box.	NA	S	S	S	S	S	S	NA	NA	NA

[1] Certain variant codes cannot be used simultaneously.

S = Included as standard.
M = On modification of a stocked motor, or on new manufacture, the number per order may be limited.
P = New manufacture only.
R = On request.
NA = Not applicable.

4

Code [1]	Variant	Motor size							Motor size		
		M2BA 71-132	M3BP 160-180	M3BP 200-250	M3BP 280-315	M3BP 355	M3BP 400	M3BP 450	M2QA 71-132	M2QA 160-250	M2BAT 280-355
Testing											
140	Test confirmation.	M	M	M	NA	NA	NA	NA	M	M	NA
145	Type test report from a catalogue motor, 400 V 50 Hz.	M	M	M	M	M	P	P	M	M	M
146	Type test with report for motor from specific delivery batch.	R	M	M	P	P	P	P	R	R	R
147	Type test with report for motor from specific delivery batch, customer witnessed.	R	M	M	P	P	P	P	R	R	R
148	Routine test report (only at 400 V 50 Hz).	M	M	M	M	M	P	P	M	M	M
149	Testing according to separate test specification.	R	R	R	R	R	R	R	R	R	NA
153	Reduced test for classification society.	R	M	M	NA	NA	NA	NA	R	R	NA
221	Type test and multi-point load test with report for motor from specific delivery batch.	R	M	M	R	R	R	R	R	R	R
222	Torque/speed curve, type test and multi-point load test with report for motor from specific delivery batch.	NA	M	M	P	P	P	P	NA	NA	NA
760	Vibration level test.	M	M	M	M	M	P	P	M	M	M
761	Vibration spectrum test.	NA	R	R	P	P	P	P	NA	NA	NA
762	Noise level test.	NA	P	P	P	P	P	P	R	NA	R
763	Noise spectrum test.	NA	R	R	P	P	P	P	NA	NA	NA
764	Complete test with ABB frequency converter available at ABB test field.	R	R	R	P	P	P	P	R	R	R
Y/Δ-starting											
117	Terminals for Y/Δ start at both speeds (two speed windings).	NA	P	P	P	R	R	R	NA	NA	NA
118	Terminals for Y/Δ start at high speed (two speed windings).	NA	NA	NA	P	R	R	R	NA	NA	NA
119	Terminals for Y/Δ start at low speed (two speed windings).	NA	R	R	P	R	R	R	NA	NA	NA
Variable speed drives											
701	Insulated bearing at N-end.	NA	R	M	M	M	P	P	NA	NA	M
704	EMC cable gland.	NA	M	M	M	M	P	P	NA	M	M
Separate motor cooling											
183	Separate motor cooling (fan axial, N-end).	P/M	M	M	M	P	P	P	M	P	NA
189	Separate motor cooling, IP44, 400V, 50Hz (fan axial, N-end).	NA	M	M	NA	NA	NA	NA	NA	NA	NA
422	Separate motor cooling (fan top or side, N-end).	NA	NA	NA	P	P	P	P	NA	NA	NA
Mounting of tacho; tacho not included											
182	Pulse sensor mounted as specified for hollow shaft.	NA	R	R	P	P	P	P	NA	NA	NA
470	Prepared for hollow shaft pulse tacho (Leine&Linde equivalent).	NA	M	M	P	P	P	P	NA	NA	NA
479	Mounting of pulse tacho with shaft extension, tacho not included.	NA	R	R	P	P	P	P	NA	NA	NA
570	Prepared for hollow shaft pulse tacho (L&L 562).	NA	M	M	NA	NA	NA	NA	NA	NA	NA

[1] Certain variant codes cannot be used simultaneously.

S = Included as standard.
M = On modification of a stocked motor, or on new manufacture, the number per order may be limited.
P = New manufacture only.
R = On request.
NA = Not applicable.

Code [1]	Variant	Motor size							Motor size		
		M2BA 71-132	M3BP 160-180	M3BP 200-250	M3BP 280-315	M3BP 355	M3BP 400	M3BP 450	M2QA 71-132	M2QA 160-250	M2BAT 280-355
Mounting of tacho; tacho included											
062	Tachogenerator.	R	NA	NA	P	P	P	P	NA	NA	NA
472	1024 pulse tacho (Leine & Linde 861) mounted	NA	M	M	M	P	P	P	R	R	NA
473	2048 pulse tacho (Leine & Linde 861) mounted	NA	M	M	M	P	P	P	R	R	NA
572	1024 pulse tacho (L&L 562) mounted.	NA	M	M	NA	NA	NA	NA	NA	NA	NA
573	2048 pulse tacho (L&L 562) mounted.	NA	M	M	NA	NA	NA	NA	NA	NA	NA
Separate motor cooling & prepared for tacho; tacho not included											
474	Separate motor cooling (fan axial, N-end) and prepared for hollow shaft tacho (Leine&Linde equivalent).	NA	M	M	P	P	P	P	NA	NA	NA
478	Separate motor cooling (fan top, N-end) and prep. for hollow shaft pulse tacho (Leine&Linde equiv).	NA	NA	NA	P	P	P	P	NA	NA	NA
486	Separate motor cooling (fan top, N-end) and prep. for DC-tacho.	NA	NA	NA	P	P	P	P	NA	NA	NA
574	Separate motor cooling (fan axial, N-end) and prepared for hollow shaft tacho (L&L 562)	NA	M	M	NA	NA	NA	NA	NA	NA	NA
578	Separate motor cooling, IP 44, 400 V, 50 Hz (fan axial, N-end) and prepared for hollow shaft tacho (L&L 562)	NA	M	M	NA	NA	NA	NA	NA	NA	NA
Separate motor cooling & tacho; tacho included											
429	Separate motor cooling (fan top, N-end) and 1024 hollow shaft pulse tacho (Leine&Linde 861) mounted.	NA	NA	NA	P	P	P	P	NA	NA	NA
510	Separate motor cooling (fan top, N-end) and 2048 hollow shaft pulse tacho (Leine&Linde 861) mounted.	NA	NA	NA	P	P	P	P	NA	NA	NA
476	Separate motor cooling (fan axial, N-end) and 1024 pulse tacho (Leine & Linde 861) mounted.	NA	M	M	P	P	P	P	NA	NA	NA
477	Separate motor cooling (fan axial, N-end) and 2048 pulse tacho (Leine&Linde 861) mounted	NA	M	M	P	P	P	P	NA	NA	NA
576	Separate motor cooling (fan axial, N-end) and 1024 pulse tacho (L&L 562).	NA	M	M	NA	NA	NA	NA	NA	NA	NA
577	Separate motor cooling (fan axial, N-end) and 2048 pulse tacho (L&L 562) mounted.	NA	M	M	NA	NA	NA	NA	NA	NA	NA
580	Separate motor cooling IP44, 400 V 50 Hz (fan axial, N-end) and 1024 pulse tacho (L&L 562) mounted.	NA	M	M	NA	NA	NA	NA	NA	NA	NA
581	Separate motor cooling IP44, 400 V 50 Hz (fan axial, N-end) and 2048 pulse tacho (L&L 562) mounted.	NA	M	M	NA	NA	NA	NA	NA	NA	NA

[1] Certain variant codes cannot be used simultaneously.

S = Included as standard.
M = On modification of a stocked motor, or on new manufacture, the number per order may be limited.
P = New manufacture only.
R = On request.
NA = Not applicable.

4

Marine cast iron motors

Dimension drawings

Foot mounted motor IM 1001, B3

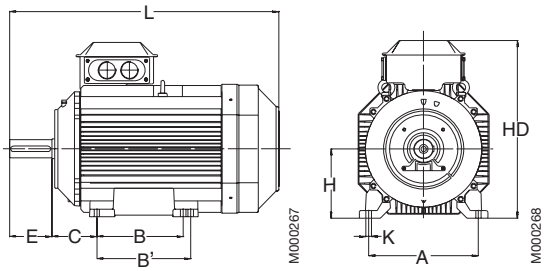

Flange mounted motor IM 3001, B5

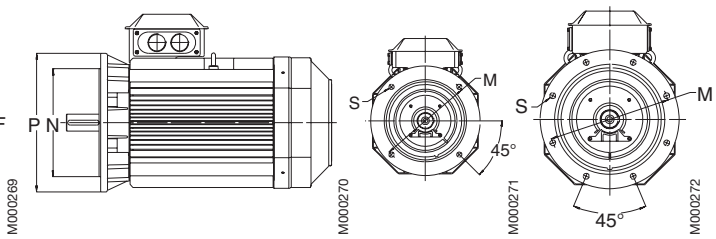

Motor size	IM 1001, B3 and IM 3001, B5										IM 1001, B3							IM 3001, B5			
	D poles 2	D poles 4-8	GA poles 2	GA poles 4-8	F poles 2	F poles 4-8	E poles 2	E poles 4-8	L max poles 2	L max poles 4-8	A	B	B'	C	HD	K	H	M	N	P	S
Cast iron motors, M2BA and M3BP																					
M2BA 71	14	14	16	16	5	5	30	30	255	255	112	90	–	45	190	7	71	130	110	160	10
80	19	19	21.5	21.5	6	6	40	40	285	285	125	100	–	50	225	10	80	165	130	200	12
90 S	24	24	27	27	8	8	50	50	310	310	140	100	–	56	240	10	90	165	130	200	12
90 L	24	24	27	27	8	8	50	50	335	335	140	125	–	56	240	10	90	165	130	200	12
100	28	28	31	31	8	8	60	60	380	380	160	140	–	63	275	12	100	215	180	250	15
112	28	28	31	31	8	8	60	60	380	380	190	140	–	70	290	12	100	215	180	250	15
132 S	38	38	41	41	10	10	80	80	465	465	216	140	–	89	335	12	132	265	230	300	15
132 M	38	38	41	41	10	10	80	80	505	505	216	178	–	89	335	12	132	265	230	300	15
M3BP 160 M																					
/MA,L2-6,LB2	42	42	45	45	12	12	110	110	602.5	602.5	254	210	254	108	382	14.5	180	300	250	350	19
160 L8, LB6-8	42	42	45	45	12	12	110	110	643.5	643.5	254	210	254	108	382	14.5	180	300	250	350	19
180M, L6-8, LB2	48	48	51.5	51.5	14	14	110	110	680	680	279	241	279	121	422	14.5	180	300	250	350	19
180 L4, LB4-8	48	48	51.5	51.5	14	14	110	110	700.5	700.5	279	241	279	121	422	14.5	180	300	250	350	19
200 ML	55	55	59	59	16	16	110	110	774	774	318	267	305	133	506	18.5	200	350	300	400	19
225 SM	55	60	59	64	16	18	110	140	866	866	356	286	311	149	552	18. 5	225	400	350	450	19
250 SM	60	65	64	69	18	18	140	140	875	875	406	311	349	168	605	24	250	500	450	550	19
280 SM_	65	75	69	79.5	18	20	140	140	1088	1088	457	368	419	190	759	24	280	500	450	550	18
315 SM_	65	80	69	85	18	22	140	170	1174	1204	508	406	457	216	852	28	315	600	550	660	23
315 ML_	65	90	69	95	18	25	140	170	1285	1315	508	457	508	216	852	28	315	600	550	660	23
355 SM_	70	100	74.5	106	20	28	140	210	1409	1479	610	560	560	254	958	35	355	740	680	800	23
355 ML_	70	100	74.5	106	20	28	140	210	1514	1584	610	630	630	254	958	35	355	740	680	800	23
355 LK_	70	100	74.5	106	20	28	140	210	1764	1834	610	710	710	254	958	35	355	740	680	800	23
400 L_	80	110	85	106	20	28	170	210	1851	1891	710	900	1000	224	1045	35	400	940	680	1000	23
400 LK_	80	100	85	126	22	28	170	210	1851	1891	686	710	800	280	1045	35	400	740	680	800	23
450	80	120	85	127	22	32	170	210	2147	2187	800	1000	1120	250	1169	42	450	1080	1000	1150	28
Cast iron motors, M2QA and M2BAT																					
M2QA 71 M	14	14	16	16	5	5	30	30	255	255	112	90	–	45	200	7	71	130	110	160	10
80 M	19	19	21.5	21.5	6	6	40	40	285	285	125	100	–	50	225	10	80	165	130	200	12
90 S	24	24	27	27	8	8	50	50	310	310	140	100	–	56	240	10	90	165	130	200	12
90 L	24	24	27	27	8	8	50	50	335	335	140	125	–	56	240	10	90	165	130	200	12
100 L	28	28	31	31	8	8	60	60	380	380	160	140	–	63	275	12	100	215	180	250	15
112 M	28	28	31	31	8	8	60	60	380	380	190	140	–	70	290	12	112	215	180	250	15
132 S	38	38	41	41	10	10	80	80	465	465	216	140	–	89	335	12	132	265	230	300	15
132 M	38	38	41	41	10	10	80	80	505	505	216	178	–	89	335	12	132	265	230	300	15
160 M	42	42	55	55	12	12	110	110	600	600	254	210	–	108	415	15	160	300	250	350	19
160 L	42	42	55	55	12	12	110	110	645	645	254	254	–	108	415	15	160	300	250	350	19
180 M	48	48	51.5	51.5	14	14	110	110	670	670	279	241	–	121	450	15	180	300	250	350	19
180 L	–	48	–	51.5	–	14	–	110	–	710	279	279	–	121	450	15	180	300	250	350	19
200 L	55	55	59	59	16	16	110	110	770	770	318	305	–	133	510	19	200	350	300	400	19
225 S	–	60	–	64	–	18	–	140	–	820	356	286	–	149	560	19	225	400	350	450	19
225 M	55	60	59	64	16	18	110	140	815	840	356	311	–	149	560	19	225	400	350	450	19
250 M	60	55	64	69	18	18	140	140	930	930	406	349	–	168	645	24	250	500	450	550	18
M2BAT 280 SM_	65	75	69	79.5	18	20	140	140	1088	1088	457	368	419	190	745	24	280	500	450	550	18
315 SM_	65	80	69	85	18	22	140	170	1218	1218	508	406	457	216	840	30	315	600	550	660	23
315 ML_	65	90	69	95	18	25	140	170	1269	1299	508	457	508	216	840	30	315	600	550	660	23
355 S	70	100	74.5	106	20	28	140	210	1344	1414	610	500	–	254	935	35	355	740	680	800	23

IM 3601. IM B14

Motor size	M	N	P	S
71	85	70	105	M6
80	100	80	120	M6
90	115	95	140	M8
100	130	110	160	M8
112	130	130	160	M8

Tolerances:

A, B	± 0.8
D, DA	ISO k6 < Ø 50mm
	ISO m6 > Ø 50mm
F, FA	ISO h9
H	+0 -0.5
N	ISO j6
C, CA	± 0.8

Above table gives the main dimensions in mm.

For detailed drawings please check our web site 'www.abb.com/motors&drives' or contact ABB.

Marine cast iron motors, M2BA and M3BP, in brief, basic design

Motor size		71	80	90	100	112	132	160	180
Stator	Material Paint colour shade	Cast iron EN-GJL-200/GG 20/GRS 200. Blue, Munsell 8B 4.5/3.25 / NCS 4822 B05G.							
	Paint thickness	Two-pack PUR-paint, thickness ≥ 60 µm.						Two-pack epoxy paint,thickness ≥ 70µm.	
Bearing end shields	Material	Cast iron EN-GJL-150/GG 15/GRS 150.				Cast iron EN-GJL-150/GG 15/GRS 150, flange end shields GJL-200.			
	Paint colour shade	Blue, Munsell 8B 4.5/3.25 / NCS 4822 B05G.							
Bearings	Paint thickness	Two-pack PUR-paint, thickness ≥ 60 µm.						Two-pack epoxy paint,thickn. ≥ 70µm.	
	D-end = N-end	6202 2RS C3	6204 2RS C3	6205 2RS C3	6206 2RS C3	6207 2RS C3	6208 2RS C3	6309/C3	6310/C3
	N-end	6202 2RS C3	6204 2RS C3	6205 2RS C3	6206 2RS C3	6206 2RS C3	6207 2RS C3	6309/C3	6309/C3
Axially-locked bearings	Inner bearing cover	As standard, locked at D-end.							
Bearing seal		2RS-integral seals.						Axial seal as standard, radial seal on request.	
Lubrication		Greased for life.						Regreasable bearings, regr, nipples M6x1.	
SPM-nipples		–						As standard.	
Rating plate	Material	Stainless steel 0.80 Cr 18 Ni9.						Stainless steel, SS-EN 10088, 0.5mm.	
Terminal box	Frame material Cover material Cover screws material	Cast iron EN-GJL-150/GG 15/GRS 150. Cast iron EN-GJL-150/GG 15/GRS 150. Steel 5G, coated with zinc and yellow cromated.							
Connections	Cable entries	2xM16	2xM25	2xM25	2xM32	2xM32	2xM32	2xM40	2xM40
	Terminals	6 terminals for connection with cable lugs (not included).							
	Cable glands	Available as option.						Cable flanges as std, cable glands as option.	
Fan	Material	Glass fibre reinforced plastic.							
Fan cover	Material Paint colour shade	Steel. Blue, Munsell 8B 4.5/3.25 / NCS 4822 B05G.							
	Paint thickness	Two-pack PUR-paint, thickness ≥ 60 µm						Two-pack polyester powder paint, thickness ≥ 50 µm	
Stator winding	Material Insulation	Copper. Insulation class F.							
	Winding protection	3 PTC thermistorsas standard, 150°C.							
Rotor winding	Material	Pressure die-cast aluminum.							
Balancing method		Half key balancing as standard.							
Key ways		Open key way.						Closed key-way.	
Heating elements	On request	25 W	25 W	25 W	25 W	25 W	25 W	25 W	25 W
Drain holes		Optional.						Standard.	
Enclosure		IP 55, higher protection on request.							
Cooling method		IC 411.							

4

Marine cast iron motors, M2BA and M3BP, in brief, basic design

Motor size		200	225	250	280	315	355	400	450
Stator	Material Paint colour shade	Cast iron EN-GJL-200/GG 20/GRS 200. Blue, Munsell 8B 4.5/3.25 / NCS 4822 B05G.							
	Paint thickness	Two-pack epoxy paint, thickness ≥ 80 µm.							
Bearing end shields **Paint colour shade**	Material	Cast iron EN-GJL-150/ GG 15; GRS150, flange end shields GLJ-200			Cast iron EN-GJL200/GG20/GRS 200, EN-GLJ-250 /GG25/ GRS 250, EN-GJS-400/GG40/GRP 400				
		Blue, Munsell 8B 4.5/3.25 / NCS 4822 B05G.							
	Paint thickness	Two-pack epoxy paint, thickness ≥ 80 µm.							
Bearings	D-end 2-pole 4-12 -pole	6312/C3	6313/C3	6315/C3	6316/C3 6316/C3	6316/C3 6319/C3	6316M/C3 6322/C3	6317M/C3 6324/C3	6317M/C3 6326/C3
	N-end 2-pole 4-12 -pole	6310/C3	6312/C3	6313/C3	6316/C3 6316/C3	6316/C3 6316/C3	6316M/C3 6316/C3	6317M/C3 6319/C3	6317M/C3 6322/C3
Axially-locked bearings	Inner bearing cover	As standard, locked at D-end.							
Bearing seals		Axial seal as standard, radial seal on request.			V-ring or labyrinth seal as standard, see table on page 'Terminal seals'.				
Lubrication		Regreasable bearings, regreasing nipples M6x1.			Regreasable bearings, regreasing nipples, M10x1.				
SPM-nipples		As standard.							
Rating plate	Material	Stainless steel, EN 10088, thickness 0.5 mm.							
Terminal box	Frame material	Cast iron EN-GJL150/GG 15/GRS 150			Cast iron EN-GJL250/GG 25/GRS 250				
	Cover material	Cast iron EN-GJL150/GG 15/GRS 150			Cast iron EN-GJL250/GG 25/GRS 250				Steel
	Cover screws material	Steel 8.8, zinc electroplated and yellow chromated.							
Connections	Cable-2-, 4-pole entries 6-pole	2xM63	2xM63	2xM63	2xM63	*)2xM63	*)2xØ60/80 *)2xØ60	*)2xØ80 *)2xØ60/80	*)2xØ60/80
	Terminals	6 terminals for connection with cable lugs (not included).							
	Cable glands	Cable flanges as standard, cable glands as option.			Cable glands included as standard.				
Fan	Material	Glass fibre reinforced plastic			Glass fibre reinforced plastic or aluminum				
Fan cover	Material Paint colour shade	Steel. Blue, Munsell 8B 4.5/3.25 / NCS 4822 B05G.							
	Paint thickness	Two-pack polyester powder paint, thickness ≥ 50 µm			Two-pack epoxy polyester powder paint, thickness ≥ 80 µm				
Stator winding	Material Insulation	Copper. Insulation class F.							
	Winding protection	3 PTC thermistors as standard, 150°C.			3 PTC thermistors as standard, 155°C.				
Rotor winding	Material	Pressure die-cast aluminum.							
Balancing method		Half key balancing as standard.							
Key way		Closed key way.			Open key way.				
Heating elements	On request	50 W	50 W	50 W	50 W	2x50 W	2x65 W	2x65 W	2x100 W
Drain holes		Standard, open on delivery.							
Enclosure		IP 55, higher protection on request.							
Cooling method		IC 411.							

*) For detailed information of connections, please see pages 'Terminal box'.

Marine cast iron motors, M2QA and M2BAT, in brief, basic design

Motor size		71	80	90	100	112	132	160
Stator	Material	Cast iron HT150 GB5675-85.						
	Paint colour shade	Blue, Munsell 8B 4.5/3.25 / NCS 4822 B05G.						
	Paint thickness	Two-pack 821 Acid Polyurethane Lacquer Enamel, thickness ≥ 60 µm.						
Bearing end shields	Material	Cast iron HT150 GB5675-85.						
	Paint colour shade	Blue, Munsell 8B 4.5/3.25 / NCS 4822 B05G.						
	Paint thickness	Two-pack 821 Acid Polyurethane Lacquer Enamel, thickness ≥ 60 µm.						
Bearings	D-end	6202 DDU C3	6204 DDU C3	6205 DDU C3	6206 DDU C3	6207 DDU C3	6208 DDUC3	6309 DDU C3
	N-end	6202 DDU C3	6204 DDU C3	6205 DDU C3	6206 DDU C3	6206 DDU C3	6207 DDU C3	6209 DDU C3
Axially-locked bearings	Inner bearing cover	As standard, locked at D-end.						
Lubrication		Greased for life.						
Rating plate	Material	Stainless steel.						
Terminal box	Frame material	Cast iron HT150 GB5675-85.						
	Cover material	Cast iron HT150 GB5675-85.						
Connections	Cable entries	2xM16x1.5	2xM25x1.5	2xM32x1.5	2xM32x1.5	2xM32x1.5	2xM32x1.5	2xM40x1.5
	Terminals	6 terminals for connection.						
Fan	Material	Reinforced glass fiber.						
Fan cover	Material	Steel.						
	Paint colour shade	Blue, Munsell 8B 4.5/3.25 / NCS 4822 B05G.						
	Paint thickness	Two-pack 821 Acid Polyurethane Lacquer Enamel, thickness ≥ 60 µm.						
Stator winding	Material Insulation	Copper. Insulation class F.						
	Winding protection	On request.						
Rotor winding	Material	Pressure die-cast aluminum.						
Balancing method		Half key balancing as standard.						
Key ways		Open key way.						
Enclosure		IP 55.						
Cooling method		IC 411.						

4

Marine cast iron motors, M2QA and M2BAT, in brief, basic design

Motor size		180	200	225	250	280	315	355
Stator	Material	Cast iron HT150 GB5675-85.				Cast iron GG 20/GRS 200.		
	Paint colour shade	Blue, Munsell 8B 4.5/3.25 / NCS 4822 B05G.						
	Paint thickness	Two-pack 821 Acid Polyurethane Lacquer Enamel, thickness ≥ 60 µm.				Two-pack epoxy paint, thickness ≥ 70 µm.		
Bearing end shields	Material	Cast iron HT150 GB5675-85.				Cast iron GG 20/GRS 200, except flange-mounted.		
	Paint colour shade	Blue, Munsell 8B 4.5/3.25 / NCS 4822 B05G.						
	Paint thickness	Two-pack 821 Acid Polyurethane Lacquer Enamel, thickness ≥ 60 µm.				Two-pack epoxy paint, thickness ≥ 70 µm.		
Bearings	D-end 2 pole 4 to 8 pole	6310 DDU C3	6312 DDU C3	6313 ZZ C3	6314 C3	6316/C4 6316/C3	6316/C4 6319/C3	6316M/C3 6322/C3
	N-end 2 pole 4 to 8 pole	6210 DDU C3	6212 DDU C3	6213 ZZ C3	6214 C3	6316/C4 6316/C3	6316/C4 6316/C3	6316M/C3 6319/C3
Axially-locked bearings	Inner bearing cover	As standard, locked at D-end.						
Lubrication		Greased for life or regreasable.			Regreasable bearings.			
Rating plate	Material	Stainless steel.				Acid proof stainless steel.		
Terminal box	Frame material	Cast iron HT150 GB5675-85.				Cast iron GG 15/GRS 150.		
	Cover material	Cast iron HT150 GB5675-85.				Cast iron GG 15/GRS 150.		
Connections	Cable entries	2xM40x1.5	2xM50x1.5	2xM50x1.5	2xM63x1.5	2xM63 + 2xM20		
	Terminals	6 terminals for connection.						
Fan	Material	Reinforced glass fiber.				Reinforced glass fiber or aluminium.		
Fan cover	Material	Steel.						
	Paint colour shade	Blue, Munsell 8B 4.5/3.25 / NCS 4822 B05G.						
	Paint thickness	Two-pack 821 Acid Polyurethane Lacquer Enamel, thickness ≥ 60 µm.				Two-pack epoxy polyester paint, thickness ≥ 80 µm.		
Stator winding	Material	Copper.						
	Insulation	Insulation class F.						
	Winding protection	On request.				3 PTC thermistors as standard, 150°C.		
Rotor winding	Material	Pressure die-cast aluminum.						
Balancing method		Half key balancing as standard.						
Key way		Open key way.						
Enclosure		IP 55.				IP 55, higher protection on request.		
Cooling method		IC 411.						

4

Marine Open Drip Proof Motors

Open drip proof squirrel cage three phase low voltage motors, Sizes 280 - 400, 110 to 800 kW

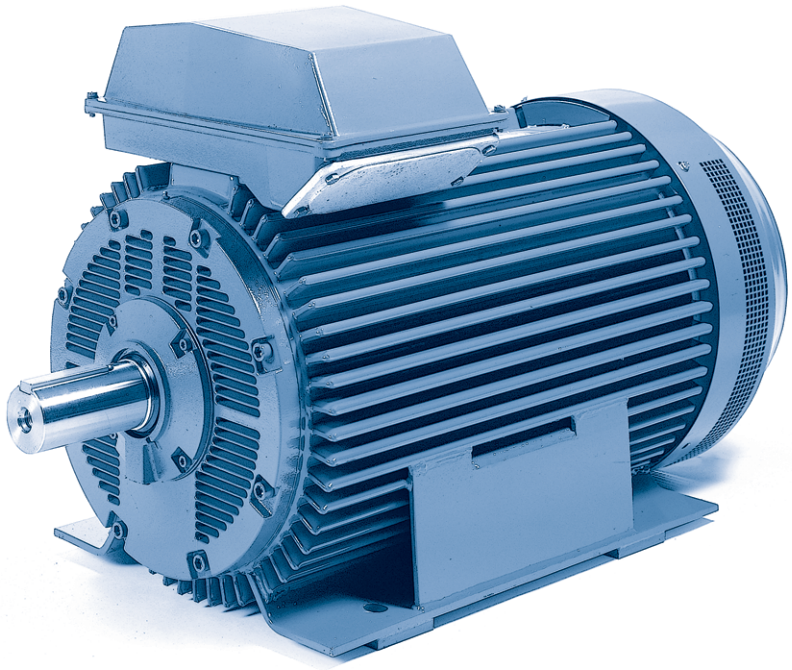

5

www.abb.com/motors&drives

> Motors
>> LV Motors >>> Marine Motors

Mechanical design..... 132

Rating plate..... 136

Ordering information..... 137

Technical data..... 138

Variant codes..... 142

Dimension drawings..... 145

Open drip proof motors in brief..... 146

Mechanical design

Stator

The stator frame is made of profile-pressed sheet steel, giving the motor high mechanical stregth, low weight and a good surface finish. The stator core is welded into the stator frame and contributes to its excellent mechanical properties.

Feet and lifting eyes are welded to the stator frame. The terminal box and end shields are of cast iron.

Drain holes

Motors that will be operated in very humid or wet environments, and especially under intermittent duty, should be provided with drain holes. The appropriate IM designation, such as IM V3 (IM 3031), is specified, on the basis of the method of motor mounting.

M2FA motors are fitted with drain holes and plugs. The plugs are open on delivery. Check that the drain holes and grease outlet face downwards, when mounting designation differs from standard horizontal mounting.

In the case of vertical mounting, the upper plug must be hammered home completely. In very dusty environments the drain hole plug should be knocked in.

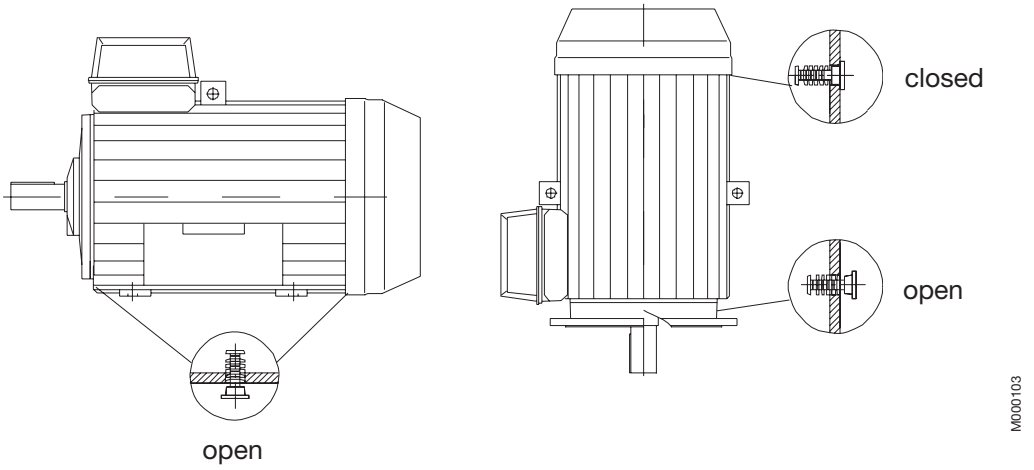

Terminal box

Terminal boxes are mounted either on the top of the motor, or on either side of the motor, see ordering information page .

In basic version the terminal box can be rotated 2x180° to allow cable entry from either side of the motor.

The terminal box is equipped with cable glands or cable boxes as standard, and terminations are suitable for Cu- and Al-cables. Cables are connected to the terminals by cable lugs which are not included with the motor.

To enable us to supply suitable terminations for the motor please state cable type, quantity and size when ordering.

For dimension drawings of terminal boxes, see drawings.

Terminal boxes and cable entries

If no ordering information on the cable is given, it is assumed to be p.v.c. -insulated type and termination parts are supplied according to the table below and on next page.

Deviations from standard design according to the following tables are available on request.

M2FA 280 to 400 motors with top-mounted terminal box

Standard cable entries and cable boxes **Voltage 380 - 690 V, 50 Hz**

Motor size M2FA	Ter-minal box	Flange or adapter	Cable box or cable gland	**Gland thread**	Max. connection Cable diameter	cable area mm²	Terminal bolt size	Voltage/ freq. code
3000 r/min (2 poles)								
280	122/4	3GZF 294730-749	2x 3GZF 294730-613	**2 x M63 x 1.5**	2x Ø32-49	2x150	M12	
315	142/4	3GZF 294730-753	2x 3GZF 294730-613		2x Ø32-49	2x240	M12	
355 SA	142/4	3GZF 294730-753	2x 3GZF 294730-613		2x Ø32-49	2x240	M12	
355 M_	162/4	3GZF 294730-944	3GZF 294730-301		2x Ø48-60	4x240	M12	D
	142/4	-	3GZF 294730-301		2x Ø48-60	2x240	M12	E
355 L_	162/4	3GZF 294730-944	3GZF 294730-301		2x Ø48-60	4x240	M12	
1500 r/min (4 poles)								
280	122/4	3GZF 294730-749	2x 3GZF 294730-613	**2 x M63 x 1.5**	2x Ø32-49	2x150	M12	
315	142/4	3GZF 294730-753	2x 3GZF 294730-613		2x Ø32-49	2x240	M12	
355 S_	142/4	3GZF 294730-753	2x 3GZF 294730-613		2x Ø32-49	2x240	M12	
355 M_	162/4	3GZF 294730-944	3GZF 294730-301		2x Ø48-60	4x240	M12	D
	142/4	-	3GZF 294730-301		2x Ø48-60	2x240	M12	E
355 LA	162/4	3GZF 294730-944	3GZF 294730-301		2x Ø48-60	4x240	M12	
355 LKD	162/4	3GZF 294730-944	3GZF 294730-501		2x Ø60-80	4x240	M12	
400 LKA	162/9	3GZF 294730-944	3GZF 294730-501		2x Ø60-80	4x240	M12	D
	162/4	3GZF 294730-944	3GZF 294730-501		2x Ø60-80	4x240	M12	E
400 LKB	162/9	3GZF 294730-944	3GZF 294730-501		2x Ø60-80	4x240	M12	
1000 r/min (6 poles)								
280	122/4	3GZF 294730-749	2x 3GZF 294730-613	**2 x M63 x 1.5**	2x Ø32-49	2x150	M12	
315	142/4	3GZF 294730-753	2x 3GZF 294730-613		2x Ø32-49	2x240	M12	
355 S_	142/4	3GZF 294730-753	2x 3GZF 294730-613		2x Ø32-49	2x240	M12	
750 r/min (8 poles)								
280	122/4	3GZF 294730-749	2x 3GZF 294730-613	**2 x M63 x 1.5**	2x Ø32-49	2x150	M12	
315	142/4	3GZF 294730-753	2x 3GZF 294730-613		2x Ø32-49	2x240	M12	
355 S_	142/4	3GZF 294730-753	2x 3GZF 294730-613		2x Ø32-49	2x240	M12	

Voltage/frequency codes:

D - 380-420 VΔ 50 Hz, 660-690 VY 50 Hz, 440-480 VΔ 60 Hz
E - 500 VΔ 50 Hz, 575 VΔ 60 Hz

Examples:

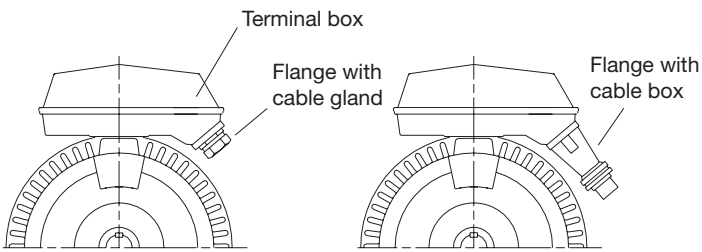

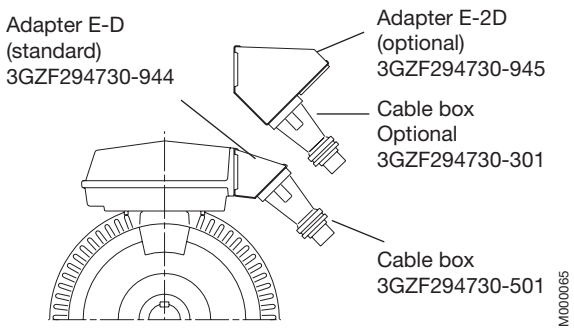

5

Alternatives for cable entries and cable boxes

The tables on previous pages show the standard terminal boxes and termination parts that are delivered when no information on the cable is given.

The table below shows the different alternatives available for cable boxes and cable entries. Other types on request.

Motor size	Terminal box	Opening type	Max.rate current A (Y/D-conn.)	Max. size of conductor mm^2	Cable entry mm	Cable box	Blank plate
280	122/4	C	210/360	2x150	1xPg29...42 2xPg29...42	1xØ36...52Ø/48...60 1xØ36...52/Ø48...60	MKLN 20
315	142/4	D	370/640	2x185	1xPg36...42 2xPg36...48	1xØ36...52/Ø48...60 2xØ48...60/Ø50...68	MKLN 30
355, 400	142/4	D	370/640	2x240	1xPg36...42 2xPg36...48	1xØ36...52/Ø48...60 2xØ48...60/Ø50...68	MKLN 30
	162/4	E-D [1]	550/950	4x240	1xPg36...42 2xPg36...48	1xØ36...52/Ø48...60 2xØ48...60/Ø50...68 2x2Ø68.. .80	
		E-2D[1]	550/950	4x240	2x1Pg36...42 2x2Pg36...48	2x1xØ36...52/Ø48...60 2x2xØ48...60/Ø50...68 2x2Ø68...80	

[1] Terminal box type 162/4 is used with a combination of one E-opening and one or two D-openings, as described below:

Terminal box 162 with adapting flange 3GZF 294730-501 (E-D) or optional 3GZF 294730-301 (E-2D):

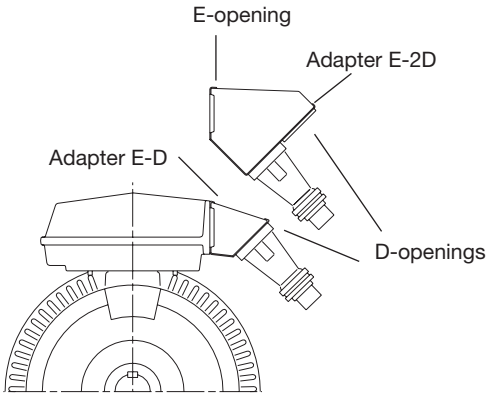

Terminal box 162 with adapting flange:

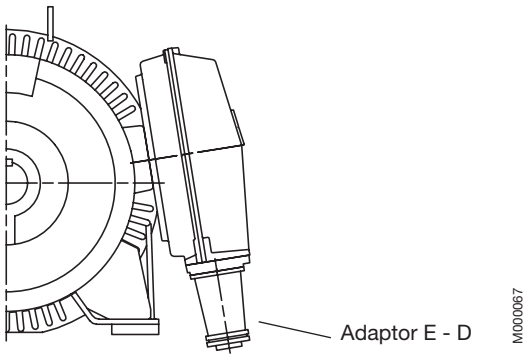

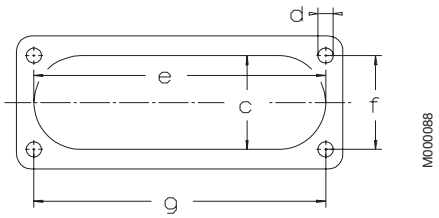

Opening	c	e	f	g	d
C	62	193	62	193	M8
D	100	300	80	292	M10
E	115	370	100	360	M12

Bearings

The motors are normally fitted with single-row deep groove ball bearings as listed in the table on the right. The complete ball bearing designation is stated on the rating plate.

If the bearing at the D-end is replaced with a roller bearing (NU- or NJ-), higher radial forces can be handled. Roller bearings are suitable for belt drive applications.

When there are high axial forces, angular-contact ball bearings should be used. This option is available on request. When a motor with angular-contact ball bearings is ordered, the method of mounting and direction and magnitude of the axial force must be specified. For special bearings, please see variant codes.

Standard bearing types

Motor size	Number of poles	**Basic version with deep groove ball bearings** D-end	N-end	**Version with roller bearings, variant code 037** D-end
280	2	6316/C4	6316/C4	-
	4-8	6319/C3	6316/C3	(NU 319/C3)
315	2	6316/C4	6316/C4	-
	4-8	6319/C3	6316/C3	(NU319/C3)
355	2 [1]	-	-	-
	4-8	6322/C3	6319/C3	(NU 322/C3)
400	4-2 [2]	6322/C3	6319/C3	(NU 322/C3)

[1] Please check technical construction with ABB.

[2] When V1-mounting D-end bearing angular type 7322B as standard.

Bearing seals

M2FA motors have, as standard, V-rings at both ends. The size and type of suitable seals are in accordance with the table below:

Motor size	Number of poles	d_1	d_2	B_1	b	**Standard design Axial seal** D-end	N-end	**Alternative design Radial seal (DIN 3760)**
280	2	80	100	13.5	10	VS80	VS80	80x100x10[1]
	4-8	95	120	13.5	12	VS80	VS80	95x120x12
315	2	80	100	13.5	10	VS80	VS80	80x100x10[1]
	4-8	95	120	13.5	12	VS95	VS80	95x120x12
355	2	95	120	13.5	12	VS95	VS95	95x120x12[1]
	4-8	110	140	15.5	12	VS110	VS95	110x140x12[1]
400	4-8	110	140	15.5	12	VS110	VS95	110x140x12[1]

[1] Viton-seal

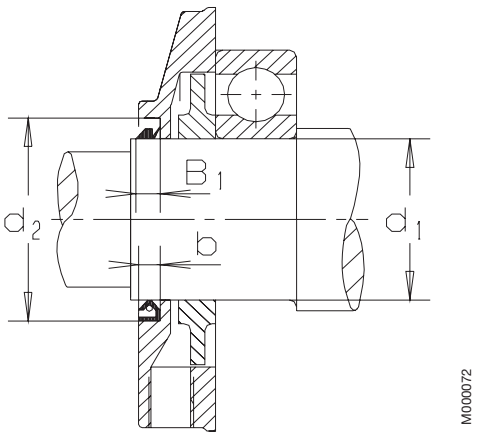

Permissible radial forces

The table below gives the permissible radial force in Newtons, assuming zero axial force. The values are based on normal conditions at 50 Hz and calculated bearing lives of 40,000 h.

Motors are B3 version with force directed sideways. In some cases the strength of the shaft affects the permissible forces.

At 60 Hz the values must be reduced by 10 %. For two-speed motors, the values must be based on the higher speed. Permissible loads of simultaneous radial and axial forces will be supplied on request.

Permissible radial and axial force for a bearing life of 40,000 hours

			Permissible radial force for:				Permissible axial force for [1]:		
			Horizontal mounting, sideways direction of force				Horizontal mounting	Vertical mounting with shaft extension downwards	
			Ball bearing at point of application:		Roller bearing at point of application:		Direction of force		
Motor size	Number of poles	Length of shaft extension E (mm)	FX_0 (N)	FX_{max} (N)	FX_0 (N)	FX_{max} (N)	Outwards N	Upwards N	Downwards N
280	2	140	5850	4500	–	–	3800	7150	2250
	4	170	8900	7050	26100	11400	5300	8800	3800
	6	170	10200	8100	29500	11300	6500	10100	4700
	8	170	11200	8900	32100	11100	7450	11200	5500
315	2	140	5800	4800	–	–	3700	7450	1800
	4	170	9000	7300	26200	14000	5000	9250	2750
	6	170	10200	8350	29600	14200	6350	10800	3300
	8	170	11300	9200	32300	14300	7300	12200	4300
355	2	140	6200	5400	–	–	2100	[2]	[2]
	4	210	12100	9800	36500	18100	4100	[2]	[2]
	6	210	13800	11200	41500	20200	5500	[2]	[2]
	8	210	15200	12300	45000	21000	6900	[2]	[2]
400	2	170	[2]	[2]	–	–	[2]	[2]	[2]
	4	210	12200	10500	37500	13500	3900	[2]	[2]
	6	210	[2]	[2]	[2]	[2]	[2]	[2]	[2]
	8	210	[2]	[2]	[2]	[2]	[2]	[2]	[2]

5

1) Flange-mounted motors with deep groove ball bearings at D-end. Other designs on request. No simultaneuous radial forces allowed.
2) On request.

If the radial force is applied between points X_0 and X_{max}, the permissible force F_R can be calculated from the following formula:

$$F_R = F_{xo} - \frac{X}{E}(F_{xo} - F_{x\,max})$$

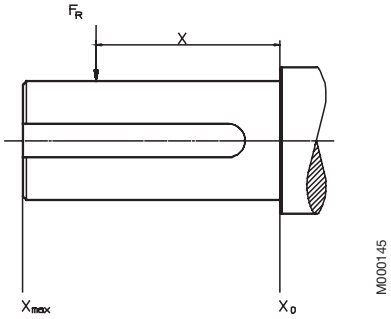

E = length of shaft extension in basic version

Rating plate

The rating plate is in table form giving values for speed, current and power factor for six voltages.

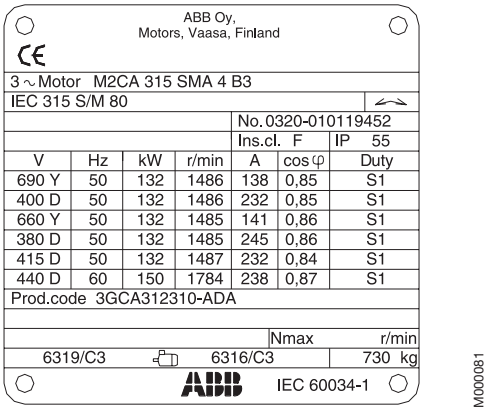

Ordering information

When placing an order, please state the following minimum data in the order, as in the example on the right.

The product code of the motor is composed in accordance with the following example.

Motor type	M2FA 315 SMA
Pole number	2
Mounting arrangement (IM-code)	IM B3 (IM 1001)
Rated output	200 kW
Product code	3GFA312210-ASB
Variant codes if needed	

A	B	C	D,E,F,	G
M2FA	**315 SMA**	**3GFA 312 210 -**	**ADA,**	**003 etc.**

1 - 4	5-6	7	8-10	11	12	13	14

A Motor type
B Motor size
C Product code
D Mounting arrangement code
E Voltage and frequency code
F Generation code
G Variant codes

Explanation of the product code:

Positions 1 to 4

3GFA = Open drip proof squirrel cage three phase motor with steel frame

Positions 5 and 6

IEC-frame size

28 = 280 **35** = 355
31 = 315 **40** = 400

Position 7

Speed (pole pairs)

1 = 2 poles **6** = 8 poles
2 = 4 poles **7** => 12 poles
3 = 6 poles **8** = Two-speed motors
4 = 8 poles **9** = Multi-speed motors
5 = 10 poles

Position 8 to 10

Serial number

Position 11

- (dash)

Position 12

Mounting arrangement

A = Foot-mounted, top-mounted terminal box
L = Foot-mounted, terminal box LHS, seen from D-end
R = Foot-mounted, terminal box RHS,seen from D-end
B = Flange-mounted
L = Foot-mounted, terminal box LHS, seen from D-end
R = Foot-mounted, terminal box RHS,seen from D-end
H = Foot- and flange-mounted, top-mounted terminal box
S = Foot- and flange-mounted, terminal box LHS seen from D-end
T = Foot- and flange-mounted, terminal box RHS seen from D-end

Position 13

Voltage/frequency code

See tables below

Position 14

Generation code

A, B, C...

The product code must, if needed, followed by variant codes.

Code letters for supplementting the product code for voltage and frequency – single speed motors:

A	B	D	E	F	H
380 VY 50 Hz	380 VΔ 50 Hz	380-420 VΔ 50 Hz 660-690 VY 50 Hz 440-480 VΔ 60 Hz	500 VΔ 50 Hz 575 VΔ 60 Hz	500 VY 50 Hz 575 VY 60 Hz	415 VΔ 50 Hz

S	T	U	X
220-240 VΔ 50 Hz 380-420 VY 50 Hz 440-480 VY 60 Hz	660 VΔ 50 Hz	690 VΔ 50 Hz	Other rated voltage, connection or frequency, max. 690 V

Code letters for supplementting the product code for voltage and frequency – two-speed motors:

A	B	D	E	H	S
220 V 50 Hz	380 V 50 Hz	380-400 V 50 Hz 440-480 V 60 Hz	500 V 50 Hz 575 V 60 Hz	400-415 V 50 Hz 460-480 V 60 Hz	220-230 V 50 Hz

Marine open drip proof motors, IP 23

Technical data, Non-Essential/Essential Services

IP 23S - IC 01 - Temperature rise 90 K

Output kW	Motor type		Product code		Speed r/min	Effi-ciency %	Power factor cos φ	Current I_N A	Current I_s / I_N	Torque T_N Nm	Torque T_s / T_N	Torque T_{max} / T_N
3000 r/min = 2 poles					**380 V 50 Hz**				**Basic design**			
132	**M2FA**	**280 SMA**	3GFA	281 210-••A	2969	94.4	0.86	246	6.5	424	1.6	2.1
160	**M2FA**	**315 SA**	3GFA	311 110-••A	2975	94.2	0.87	302	6.4	514	1.5	2.3
200	**M2FA**	**315 SMA**	3GFA	311 210-••A	2974	94.3	0.87	370	6.7	644	1.6	2.4
250	**M2FA**	**315 MB**	3GFA	311 320-••A	2974	94.4	0.88	449	6.7	804	1.7	2.4
315	**M2FA**	**315 MC**	3GFA	311 330-••A	2974	94.6	0.86	576	7.5	1013	1.9	2.6
355	**M2FA**	**315 LA**	3GFA	311 510-••A	2965	94.8	0.89	635	6.5	1144	1.8	2.3
400	**M2FA**	**315 LB**	3GFA	311 520-••A	2966	94.7	0.88	720	7.0	1290	1.8	2.4
400	**M2FA**	**355 SA**	3GFA	351 110-••A	2980	94.6	0.90	700	6.7	1282	1.0	2.4
450	**M2FA**	**355 MA**	3GFA	351 310-••A	2975	94.9	0.90	795	7.2	1445	1.2	2.8
500	**M2FA**	**355 MB**	3GFA	351 320-••A	2970	95.1	0.90	880	6.5	1608	1.1	2.5
560	**M2FA**	**355 LA**	3GFA	351 510-••A	2978	95.5	0.90	980	8.3	1796	1.4	2.8
3000 r/min = 2 poles					**380 V 50 Hz**				**High-output design**			
160	**M2FA**	**280 MB**	3GFA	281 320-••A	2968	94.8	0.88	288	6.7	515	1.8	2.5
1500 r/min = 4 poles					**380 V 50 Hz**				**Basic design**			
110	**M2FA**	**280 SA**	3GFA	282 110-••A	1474	92.8	0.85	217	5.5	712	1.6	2.2
132	**M2FA**	**280 SMA**	3GFA	282 210-••A	1474	93.2	0.86	255	5.7	855	1.6	2.2
160	**M2FA**	**315 SA**	3GFA	312 110-••A	1481	94.5	0.85	306	6.3	1031	1.6	2.1
200	**M2FA**	**315 SMA**	3GFA	312 210-••A	1480	94.6	0.85	379	6.0	1287	1.6	2.1
250	**M2FA**	**315 MB**	3GFA	312 320-••A	1479	94.7	0.86	470	6.2	1614	1.7	2.3
312	**M2FA**	**315 LA**	3GFA	312 510-••A	1475	94.5	0.85	596	6.6	2039	1.8	2.2
355	**M2FA**	**355 SB**	3GFA	352 120-••A	1484	95.3	0.84	670	6.0	2285	1.8	2.3
400	**M2FA**	**355 SC**	3GFA	352 130-••A	1482	95.2	0.85	746	5.4	2578	1.5	2.0
450	**M2FA**	**355 MA**	3GFA	352 310-••A	1483	95.3	0.85	835	6.0	2898	1.6	2.2
500	**M2FA**	**355 LA**	3GFA	352 510-••A	1484	95.3	0.84	949	6.9	3218	1.8	2.5
560	**M2FA**	**355 LKD**	3GFA	352 540-••A	[1]	[1]	[1]	[1]	[1]	[1]	[1]	[1]
750	**M2FA**	**400 LKB**	3GFA	402 520-••A	[1]	[1]	[1]	[1]	[1]	[1]	[1]	[1]
1500 r/min = 4 poles					**380 V 50 Hz**				**High-output design**			
160	**M2FA**	**280 MB**	3GFA	282 320-••A	1478	93.9	0.84	310	6.8	1033	2.2	2.3

[1] On request

The bullets in the product code indicate choice of mounting arrangement, voltage and frequency, generation code

(see ordering information page).

Marine open drip proof motors, IP 23

Technical data, Non-Essential/Essential Services

IP 23S - IC 01 - Temperature rise 90 K

Output kW	Motor type		Speed r/min	Effi-ciency %	Power factor cos φ	Current I_N A	Current I_s / I_N	Torque T_N Nm	Torque T_s / T_N	Torque T_{max} / T_N	Moment of inertia J=1/4 GD² kgm²	Weight kg
3600 r/min = 2 poles			**440 V 60 Hz**					**Basic design**				
152	**M2FA**	**280 SMA**	3568	94.2	0.87	238	6.5	407	1.5	2.3	0.8	540
185	**M2FA**	**315 SA**	3570	94.3	0.87	300	6.3	495	1.2	2.3	1.2	695
230	**M2FA**	**315 SMA**	3570	94.4	0.87	370	6.7	616	1.4	2.4	1.4	770
285	**M2FA**	**315 MB**	3571	94.5	0.88	445	6.6	763	1.3	2.3	1.7	840
360	**M2FA**	**315 MC**	3574	94.8	0.87	573	7.6	963	1.7	2.6	1.7	840
400	**M2FA**	**315 LA**	3568	95.0	0.90	610	6.6	1071	1.6	2.3	2.1	975
460	**M2FA**	**315 LB**	3568	94.7	0.89	718	7.1	1233	1.6	2.4	2.1	975
460	**M2FA**	**355 SA**	3580	94.2	0.90	690	6.8	1227	1.0	2.4	3.2	1220
520	**M2FA**	**355 MA**	3574	94.8	0.90	785	7.3	1389	1.2	2.7	3.5	1320
575	**M2FA**	**355 MB**	3570	94.9	0.90	869	6.6	1538	1.0	2.5	3.5	1320
[1]	**M2FA**	**355 LA**	[1]	[1]	[1]	[1]	[1]	[1]	[1]	[1]	4.8	1530
3600 r/min = 2 poles			**440 V 60 Hz**					**High-output design**				
185	**M2FA**	**280 MB**	3567	95.0	0.89	286	6.7	495	1.6	2.5	1.15	580
1800 r/min = 4 poles			**440 V 60 Hz**					**Basic design**				
126	**M2FA**	**280 SA**	1774	93.5	0.85	211	5.6	678	1.5	2.1	1.15	445
152	**M2FA**	**280 SMA**	1773	93.8	0.85	251	5.7	818	1.5	2.2	1.4	490
184	**M2FA**	**315 SA**	1781	95.8	0.86	301	6.4	986	1.5	2.1	2	680
230	**M2FA**	**315 SMA**	1782	95.2	0.86	372	6.0	7232	1.5	2.1	2.3	735
287	**M2FA**	**315 MB**	1779	95.1	0.86	460	6.2	1540	1.6	2.2	2.9	850
360	**M2FA**	**315 LA**	1775	94.6	0.86	589	6.7	1936	1.7	2.2	3.5	970
408	**M2FA**	**355 SB**	1783	95.4	0.84	654	6.3	2185	1.8	2.3	5.5	1220
460	**M2FA**	**355 SC**	1782	95.1	0.85	744	5.6	2465	1.5	2.0	5.5	1220
500	**M2FA**	**355 MA**	1784	95.4	0.86	790	6.1	2677	1.6	2.1	6.5	1350
575	**M2FA**	**355 LA**	1784	95.4	0.84	920	7.1	3078	1.6	2.5	7.8	1550
[1]	**M2FA**	**355 LKD**	[1]	[1]	[1]	[1]	[1]	[1]	[1]	[1]	9.8	1820
[1]	**M2FA**	**400 LKB**	[1]	[1]	[1]	[1]	[1]	[1]	[1]	[1]	[1]	2700
1800 r/min = 4 poles			**440 V 60 Hz**					**High-output design**				
183	**M2FA**	**280 MB**	1778	94.4	0.85	302	6.8	982	2.1	2.3	1.7	550

[1] On request

5

Marine open drip proof motors, IP 23

Technical data, Non-Essential/Essential Services

IP 23S - IC 01 - Temperature rise 90 K

Output kW	Motor type		Product code		Speed r/min	Effi-ciency %	Power factor cos φ	Current I_N A	I_s / I_N	Torque T_N Nm	T_s / T_N	T_{max} / T_N
1000 r/min = 6 poles					**380 V 50 Hz**				**Basic design**			
75	**M2FA**	**280 SA**	3GFA	283 110-••A	985	92.7	0.79	158	5.5	726	1.7	2.0
90	**M2FA**	**280 SMA**	3GFA	283 210-••A	986	92.9	0.79	190	5.9	872	1.8	2.1
110	**M2FA**	**315 SA**	3GFA	313 110-••A	986	93.4	0.85	212	7.1	1064	1.5	2.3
132	**M2FA**	**315 SMA**	3GFA	313 210-••A	986	93.7	0.85	256	7.4	1278	1.6	2.4
160	**M2FA**	**315 MB**	3GFA	313 320-••A	986	94.0	0.85	310	7.9	1547	1.7	2.5
185	**M2FA**	**315 LA**	3GFA	313 510-••A	986	94.2	0.85	352	8.1	1790	1.7	2.6
200	**M2FA**	**355 SA**	3GFA	353 110-••A	989	94.5	0.84	385	6.8	1931	1.5	2.3
250	**M2FA**	**355 SB**	3GFA	353 120-••A	989	94.7	0.84	478	7.0	2414	1.5	2.3
300	**M2FA**	**355 MA**	3GFA	353 310-••A	988	94.9	0.85	546	7.0	2900	1.5	2.3
1000 r/min = 6 poles					**380 V 50 Hz**				**High-output design**			
110	**M2FA**	**280 MB**	3GFA	283 320-••A	986	93.4	0.79	231	6.2	1065	1.9	2.0
750 r/min = 8 poles					**380 V 50 Hz**				**Basic design**			
55	**M2FA**	**280 SA**	3GFA	284 110-••A	736	89.9	0.81	119	5.4	713	1.1	1.8
75	**M2FA**	**280 SMA**	3GFA	284 210-••A	736	91.7	0.79	161	5.8	973	1.3	1.9
90	**M2FA**	**315 SMA**	3GFA	314 210-••A	738	92.7	0.80	186	6.5	1164	1.5	2.4
110	**M2FA**	**315 MB**	3GFA	314 320-••A	738	93.2	0.80	233	6.9	1422	1.6	2.5
132	**M2FA**	**315 LA**	3GFA	314 510-••A	737	93.1	0.80	275	6.9	1706	1.6	2.5
150	**M2FA**	**355 SA**	3GFA	354 110-••A	739	93.3	0.77	322	5.1	1938	1.2	1.9
185	**M2FA**	**355 SB**	3GFA	354 120-••A	739	93.7	0.78	393	5.3	2391	1.3	1.9
750 r/min = 8 poles					**380 V 50 Hz**				**High-output design**			
90	**M2FA**	**280 MB**	3GFA	284 320-••A	738	92.5	0.78	192	6.4	1164	1.4	2.0

5

The bullets in the product code indicate choice of mounting arrangement, voltage and frequency, generation code

(see ordering information page).

Marine open drip proof motors, IP 23

Technical data, Non-Essential/Essential Services

IP 23S - IC 01 - Temperature rise 90 K

Output kW	Motor type		Speed r/min	Effi-ciency %	Power factor cos φ	Current I_N A	I_s / I_N	Torque T_N Nm	T_s / T_N	T_{max} / T_N	Moment of inertia J=1/4 GD² kgm²	Weight kg
1200 r/min = 6 poles			**440 V 60 Hz**					**Basic design**				
86	**M2FA**	**280 SA**	1185	93.4	0.80	153	5.5	697	1.6	2.0	1.65	440
103	**M2FA**	**280 SMA**	1186	93.7	0.80	183	5.9	829	1.7	2.1	2.6	475
126	**M2FA**	**315 SA**	1186	94.0	0.85	205	7.0	1011	1.4	2.3	2.9	630
152	**M2FA**	**315 SMA**	1185	94.3	0.86	250	7.4	1214	1.5	2.4	3.8	720
184	**M2FA**	**315 MB**	1186	94.5	0.86	300	7.9	1470	1.6	2.6	4.5	810
212	**M2FA**	**315 LA**	1186	94.7	0.86	345	8.0	1701	1.6	2.6	5.4	915
230	**M2FA**	**355 SA**	1188	94.9	0.84	380	6.8	1849	1.4	2.3	8.7	1220
287	**M2FA**	**355 SB**	1188	95.1	0.85	471	7.0	2307	1.4	2.3	10.2	1320
345	**M2FA**	**355 MA**	1188	95.1	0.85	553	7.0	2773	1.4	2.3	12.5	1550
1200 r/min = 6 poles			**440 V 60 Hz**					**High-output design**				
126	**M2FA**	**280 MB**	1186	94.1	0.80	222	7.0	1011	1.4	2.3	2.9	545
900 r/min = 8 poles			**440 V 60 Hz**					**Basic design**				
63	**M2FA**	**280 SA**	886	91.8	0.81	116	5.4	679	1.0	1.8	1.85	460
86	**M2FA**	**280 SMA**	886	92.5	0.80	156	5.8	926	1.2	1.9	2.2	500
103	**M2FA**	**315 SMA**	888	93.3	0.81	186	6.5	1107	1.4	2.4	3.8	720
126	**M2FA**	**315 MB**	888	93.8	0.81	226	7.0	1354	1.4	2.5	4.5	810
152	**M2FA**	**315 LA**	887	93.7	0.81	271	7.0	1636	1.4	2.5	5.4	915
172	**M2FA**	**355 SA**	889	93.9	0.77	320	5.2	1848	1.1	1.9	8.7	1220
212	**M2FA**	**355 SB**	889	94.1	0.78	383	5.4	2277	1.2	1.9	10.2	1320
900 r/min = 8 poles			**440 V 60 Hz**					**High-output design**				
103	**M2FA**	**280 MB**	887	93.1	0.79	188	6.4	1108	1.3	2.0	2.9	575

Marine open drip proof motors - Variant codes

Code [1]	Variant	Motor size			
		280	315	355	400
Balancing					
052	Balancing to Grade A (IEC 60034-14).	S	S	S	S
417	Balancing to Grade B (IEC 60034-14).	P	P	P	P
Bearings and lubrication					
036	Transport lock for bearings.	P	P	P	P
037	Roller bearing at D-end.	P	P	P	P
043	SPM nipples.	P	P	P	P
058	Angular contact bearing at D-end, shaft force away from bearing.	P	P	P	P
107	Pt-100 2-wire in bearings.	P	P	P	P
420	Bearing mounted PTC thermistors.	P	P	P	P
Branch standard designs					
209	Non-standard voltage or frequency (special winding).	P	P	P	P
Coupling					
035	Assembly of customer supplied coupling-half (finish bored and balanced).	P	P	P	P
Heating elements					
450	Heating element, 100-120 V.	P	P	P	P
451	Heating element, 200-240 V.	P	P	P	P
Insulation system					
014	Winding insulation class H.	P	P	P	P
Mounting arrangements					
009	IM 2001 foot/flange mounted, IEC flange, from IM 1001 (B35 from B3).	P	P	P	R
066	Modified for non-standard mounting position (please specify IM xxxx). (must be ordered for all mounting arrangements excluding IM B3 (1001) and B5 (3001).	P	P	P	P
Painting					
114	Special paint colour, standard grade.	P	P	P	P
Protection					
005	Protective roof, vertical motor, shaft down.	P	P	P	P
072	Radial seal at D-end.	P	P	P	P
Rating & instruction plates					
002	Restamping voltage, frequency and output, continuous duty.	P	P	P	P
095	Restamping output (maintained voltage, frequency), intermittent duty.	P	P	P	P
135	Mounting of additional identification plate, stainless.	P	P	P	P
138	Mounting of additional identification plate, aluminum.	P	P	P	P
161	Additional rating plate delivered loose.	P	P	P	P
Shaft & rotor					
070	One or two special shaft extensions, standard shaft material.	P	P	P	P
Standards and regulations					
027	Fulfilling American Bureau of Shipping (ABS) requirements, Essential Service.	P	P	P	P
096	Fulfilling Lloyds Register of Shipping (LR) Non-Essential Service	P	P	P	P
186	Fulfilling Det Norske Veritas (DNV) requirements Non-Essential Service	P	P	P	P
481	Fulfilling Nippon Kaiji Kyokai (NK) requirements, Essential Service.	P	P	P	P
483	Fulfilling China Classification Societies (CCS) requirements (Beijing), Essential Service.	P	P	P	P
484	Fulfilling Korea Register of Shipping (KR) requirements, Essential Service.	P	P	P	P
485	Fulfilling China Corporational Register of Shipping (CR) requirements (Taipei), Essential Service.	NA	NA	NA	NA

[1] Certain variant codes cannot be used simultaneously.

S = Included as standard.
M = On modification of a stocked motor, or on new manufacture, the number per order may be limited.
P = New manufacture only.
R = On request.
NA = Not applicable.

Code [1]	Variant	Motor size			
		280	315	355	400
491	Fulfilling Nippon Kaiji Kyokai (NK) requirements, Non-Essential Service.	P	P	P	P
492	Fulfilling Registro Italiano Navale (RINA) requirements, Non-Essential Service.	P	P	P	P
493	Fulfilling China Classification Societies (CCS) Requirements (Beijing), Non-Essential Service.	P	P	P	P
494	Fulfilling Korea Register of Shipping (KR) requirements, Non-Essential Service.	P	P	P	P
495	Fulfilling China Corporational Register of Shipping (CR) requirements (Taipei), Non-Essential Service.	NA	NA	NA	NA
496	Fulfilling Bureau Veritas (BV) requirements, Non-Essential Service.	P	P	P	P
497	Fulfilling Russian Maritime Register of Shipping (RS) requirements, Non-Essential Service.	P	P	P	P
Stator winding temperature sensors					
121	Bimetal detectors, break type (NCC), (3 in series), 130°C, in stator winding.	P	P	P	P
122	Bimetal detectors, break type (NCC), (3 in series), 150°C, in stator winding.	P	P	P	P
123	Bimetal detectors, break type (NCC), (3 in series), 170°C, in stator winding.	P	P	P	P
125	Bimetal detectors, break type (NCC), (2x3 in series), 150°C, in stator winding.	P	P	P	P
127	Bimetal detectors, break type (NCC), (3 in series, 130°C & 3 in series, 150°C), in stator winding.	P	P	P	P
435	PTC - thermistors (3 in series), 130°C, in stator winding.	P	P	P	P
436	PTC - thermistors (3 in series), 150°C, in stator winding.	S	S	S	S
437	PTC - thermistors (3 in series), 170°C, in stator winding.	P	P	P	P
439	PTC - thermistors (2x3 in series), 150°C, in stator winding.	P	P	P	P
441	PTC - thermistors (3 in series 130°C & 3 in series 150°C), in stator winding.	P	P	P	P
442	PTC - thermistors (3 in series 150°C & 3 in series 170°C), in stator winding.	P	P	P	P
445	Pt-100 resistance element (1 per phase) in stator winding.	P	P	P	P
446	Pt-100 resistance elements (2 per phase) in stator winding.	P	P	P	P
Terminal box					
021	Terminal box LHS, seen from D-end (= L in product code).	P	P	P	P
022	Cable entry LHS (seen from D-end).	P	P	P	P
180	Terminal box RHS, seen from D-end (= L in product code).	P	P	P	P
468	Cable entry from D-end.	P	P	P	P
Testing					
145	Type test report from test of identical motor.	P	P	P	P
146	Type test with report for motor from specific delivery batch.	P	P	P	P
147	Type test with report for motor from specific delivery batch, customer witnessed.	P	P	P	P
148	Routine test report.	P	P	P	P
149	Testing according to separate test specification.	R	R	R	R
760	Vibration level test.	P	P	P	P
761	Vibration spectrum test.	P	P	P	P
762	Noise level test.	P	P	P	P
763	Noise spectrum test.	P	P	P	P

[1] Certain variant codes cannot be used simultaneously.

S = Included as standard.
M = On modification of a stocked motor, or on new manufacture, the number per order may be limited.
P = New manufacture only.
R = On request.
NA = Not applicable.

5

Marine open drip proof motors

Dimension drawings

Foot mounted motor IM 1001, B3

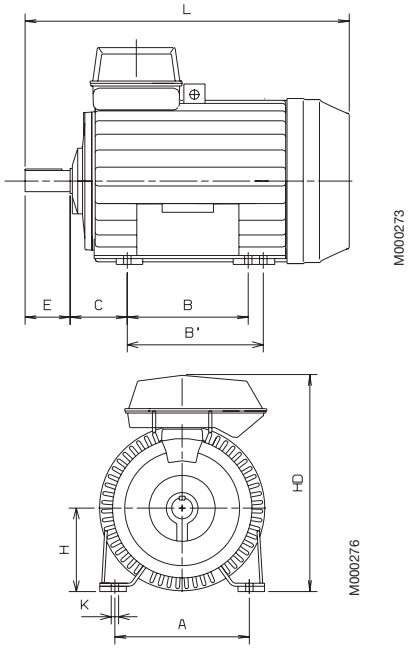

Flange mounted motor IM 3001, B5

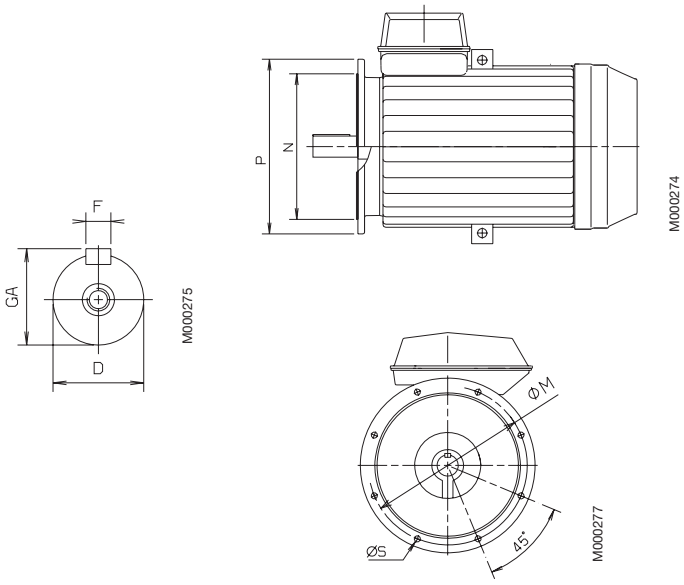

Motor size	IM 1001, B3 and IM 3001, B5										IM 1001, B3							IM 3001, B5			
	D poles		GA poles		F poles		E poles		L max poles												
	2	4-8	2	4-8	2	4-8	2	4-8	2	4-8	A	B	B'	C	HD	K	H	M	N	P	S
280 SA	-	80	-	85	-	22	-	170	-	1020	457	368	-	190	730	24	280	600	550	660	23
280 SMA	65	80	69	85	18	22	140	170	1060	1090	457	368	419	190	730	24	280	600	550	660	23
280 MB	65	80	69	85	18	22	140	170	1120	1150	457	419	-	190	730	24	280	600	550	660	23
315 SA	70	90	74.5	95	20	25	140	170	1123	1153	508	406	-	216	820	28	315	740	680	800	23
315 SMA	70	90	74.5	95	20	25	140	170	1223	1153	508	406	457	216	820	28	315	740	680	800	23
315 MB	70	90	74.5	95	20	25	140	170	1223	1253	508	457	-	216	820	28	315	740	680	800	23
315 LA, LB	70	90	74.5	95	20	25	140	170	1293	1323	508	508	-	216	848	28	315	740	680	800	23
355 S_	75	100	79.5	106	20	28	140	210	1310	1380	610	500	-	254	920	28	355	740	680	800	23
355 M_	75	100	79.5	106	20	28	140	210	1370	1440	610	560	-	254	920	28	355	740	680	800	23
355 L_	75	100	79.5	106	20	28	140	210	1450	1520	610	630	-	254	920	28	355	740	680	800	23
355 LK_	75	100	79.5	106	20	28	140	210	1590	1660	610	630	710	254	920	28	355	740	680	800	23
400 LK_	90	100	95	106	25	28	170	210	1786	1826	686	710	800	280	1003	35	400	940	880	1000	28

Above table gives the main dimensions in mm.

For detailed drawings please see our web site 'www.abb.com/motors&drives or contact us.

Marine open drip proof motors in brief, basic design

Motor frame size			280	315	355	400
Stator	Material Paint colour shade Paint thickness		Profile-pressed sheet steel. Blue, Munsell 8B 4.5/3.25/NCS 4822-B05G Two-pack epoxy paint, thickness ≥ 70 mm.			
Bearing end shields	Material Paint colour shade Paint thickness		Cast iron GG 20/GRS 200. Blue, Munsell 8B 4.5/3.25 / NCS 4822-B05G. Two-pack epoxy paint, thickness ≥ 70 mm.			
Bearings	D-end	2-pole 4-12 poles	6316/C4 6319/C3	6316/C4 6319/C4	on request 6322/C3	on request 6322/C3
	N-end	2-pole 4-12 poles	6316/C4 6316/C3	6316/C4 6316/C3	on request 6319/C3	on request 6319/C3
Axially-locked bearings	Inner bearing cover		As standard, locked at D-end.			
Bearing seal			V-ring as standard, radial seal on request.			
Lubrication			Regreasing nipples, M10x1. Grease for bearing temperatures -30°C to +120°C.			
Rating plate			Stainless steel, with individual serial number.			
SPM-nipples			On request.			
Terminal box	Frame material Cover material Cover screw material		Cast iron GG 15 / GRS 150. Cast iron GG 15 / GRS 150. Steel 5G, coated with zinc and yellow chromated.			
Connections	Cable entries	2-, 4-pole	2xM63	2xØ50/80		2xØ80
		6-pole	2xM63	2xØ60		2xØ60/80
	Terminals		6 terminals for connection with cable lugs (not included).			
Fan	Material		Silumin.			
Fan cover	Material Paint colour shade Paint thickness		Sheet steel. Blue, Munsell 8B 4.5/3.25 / NCS 4822-B05G. Two-pack epoxypolyester paint, thickness ≥ 80 mm.			
Stator winding	Material Insulation		Copper. Insulation class F.			
	Winding protection		PTC-thermistors 150°C, 3 in series, as standard.			
Rotor winding	Material		Pressure die-cast aluminum.			
Balancing method			Half key balancing as standard.			
Key way			Closed key way.			
Heating elements	On request		50 W	2x50 W	2x65 W	2x65 W
Drain holes			As standard, open on delivery.			
Enclosure			IP 23 S.			
Cooling method			IC 01.			

5

Marine open drip proof motors in brief, basic design

Motor frame size			280	315	355	400
Stator	Material Paint colour shade Paint thickness		Profile-pressed sheet steel. Blue, Munsell 8B 4.5/3.25/NCS 4822-B05G Two-pack epoxy paint, thickness ≥ 70 mm.			
Bearing end shields	Material Paint colour shade Paint thickness		Cast iron GG 20/GRS 200. Blue, Munsell 8B 4.5/3.25 / NCS 4822-B05G. Two-pack epoxy paint, thickness ≥ 70 mm.			
Bearings	D-end	2-pole 4-12 poles	6316/C4 6319/C3	6316/C4 6319/C4	on request 6322/C3	on request 6322/C3
	N-end	2-pole 4-12 poles	6316/C4 6316/C3	6316/C4 6316/C3	on request 6319/C3	on request 6319/C3
Axially-locked bearings	Inner bearing cover		As standard, locked at D-end.			
Bearing seal			V-ring as standard, radial seal on request.			
Lubrication			Regreasing nipples, M10x1. Grease for bearing temperatures -30°C to +120°C.			
Rating plate			Stainless steel, with individual serial number.			
SPM-nipples			On request.			
Terminal box	Frame material Cover material Cover screw material		Cast iron GG 15 / GRS 150. Cast iron GG 15 / GRS 150. Steel 5G, coated with zinc and yellow chromated.			
Connections	Cable entries	2-, 4-pole	2xM63	2xØ50/80		2xØ80
		6-pole	2xM63	2xØ60		2xØ60/80
	Terminals		6 terminals for connection with cable lugs (not included).			
Fan	Material		Silumin.			
Fan cover	Material Paint colour shade Paint thickness		Sheet steel. Blue, Munsell 8B 4.5/3.25 / NCS 4822-B05G. Two-pack epoxypolyester paint, thickness ≥ 80 mm.			
Stator winding	Material Insulation		Copper. Insulation class F.			
	Winding protection		PTC-thermistors 150°C, 3 in series, as standard.			
Rotor winding	Material		Pressure die-cast aluminum.			
Balancing method			Half key balancing as standard.			
Key way			Closed key way.			
Heating elements	On request		50 W	2x50 W	2x65 W	2x65 W
Drain holes			As standard, open on delivery.			
Enclosure			IP 23 S.			
Cooling method			IC 01.			

5

Other Motor types used in marine applications

Totally enclosed squirrel cage three phase low voltage motors,

Motors for hazardous areas
Sizes 71 - 450, 0.25 to 1000 kW

Water cooled motors
Sizes 280 - 450

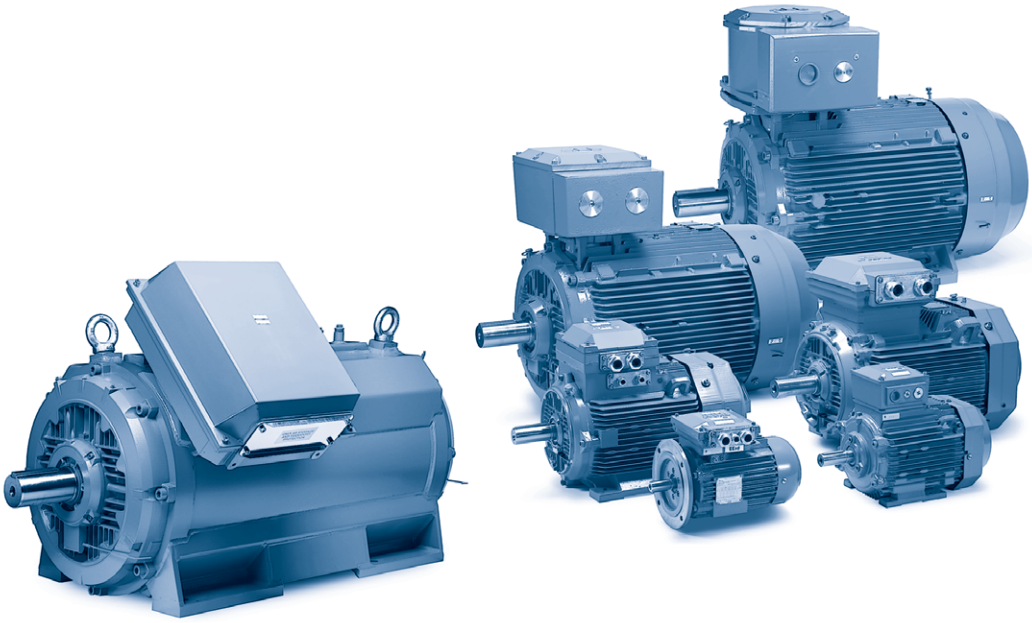

6

www.abb.com/motors&drives

> Motors
>> LV Motors >>> Motors for hazardous areas
>> LV Motors >>> Water cooled motors

Motors for Hazardous Areas

6

Hazardous area motors in marine applications are typically flameproof motors, and they are used in different applications like;
– pumps
– ventilation
– compressors
– winches
– open deck

A wide range of hazardous area motors are available for all classification societies.

Hazardous area motors are certified according to newest EN and IEC standards, as well as they are tested for use in frequency conveter applications. Detailed information can be found in the product catalogue ‘Motors for Hazardous Areas’.

Product range:

Protection type	Frame sizes	Output
Flameproof Ex d, Ex de II T4	80 to 400	0.55 to 710 kW
Increased safety Ex e	80 to 400	0.55 to 400 kW
Non-sparking Ex nA	71 to 450	0.25 to 1000 kW
Voltage	up to 690 V	
Number of poles	2 to 8 poles	

Water Cooled Motors

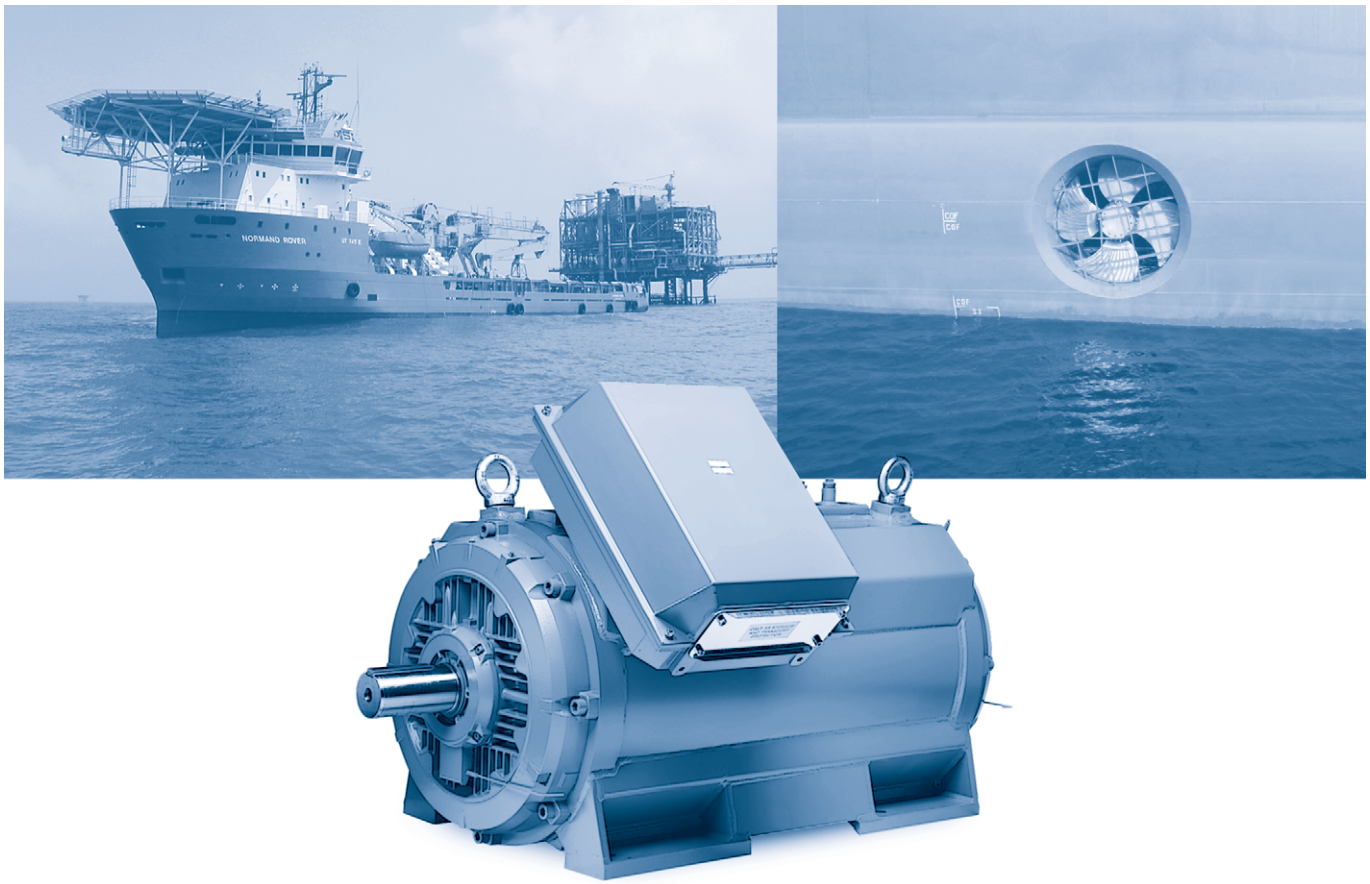

ABB has designed a new water cooled motor for frames 355-450 to be used in marine applications, such as winches, thruster and propulsion solutions.

Water cooling is a very efficient method of transferring heat away from motor, and water cooled motors provide high output power per unit of weight. Cooling efficiency is maintained even at lower speeds, which is especially important in constant torque applications.

These advantages make the motors ideal for marine applications. The basic structure is optimized for variable speed use.

Detailed information can be found in the product catalogue ‘Low Voltage Water Cooled Motors’.

6

Product range:

Frame sizes	280 to 450
Power	up to 1000 kW
Voltage	up to 690 V
Number of poles	4 to 8 poles

ABB Motors' total product offer

ABB offers several comprehensive ranges of AC motors and generators. We manufacture synchronous motors for even the most demanding applications, and a full range of low and high voltage induction motors. Our in-depth knowledge of virtually every type of industrial processing ensures we always specify the best solution for your needs.

Low voltage motors and generators

General purpose motor for standard applications
– Aluminum motors
– Steel motors
– Cast iron motors
– Open drip proof motors
– Global motors
– Brake motors
– Single phase motors
– Servo motors

Process performance motors for more demanding applications
– Aluminum motors
– Cast iron motors (IEC and NEMA)
– Motors for high ambient temperatures
– Permanent magnet motors
– High speed motors
– Wind turbine generators
– Smoke venting motors
– Water cooled motors
– Motors for roller table drives

Motors for hazardous areas
– Flameproof motors
– Increased safety motors
– Non-sparking motors
– Dust ignition proof motors

Marine motors
– Aluminum motors
– Steel motors
– Cast iron motors
– Open drip proof motors

High voltage and synchronous motors and generators

– High voltage cast iron motors
– Induction modular motors
– Slip ring motors
– Motors for hazardous areas
– Servomotors
– Synchronous motors and generators
– DC motors and generators

Visit our web site

www.abb.com/motors&drives

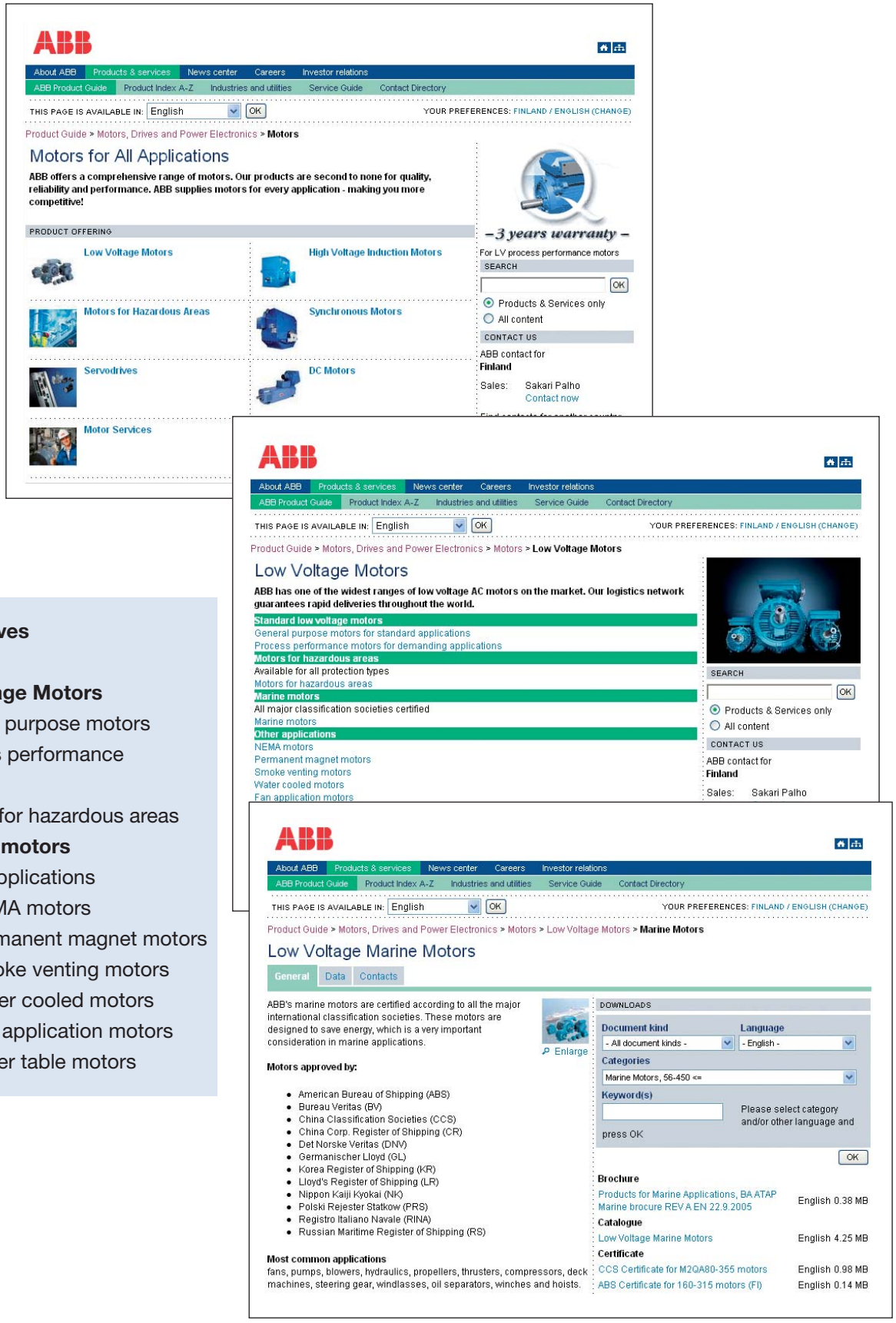

Motors & Drives

⇒ **Motors**

⇒ **Low Voltage Motors**

- General purpose motors
- Process performance motors
- Motors for hazardous areas
- ⇒ **Marine motors**
- Other applications
  - NEMA motors
  - Permanent magnet motors
  - Smoke venting motors
  - Water cooled motors
  - Fan application motors
  - Roller table motors

Low Voltage Motors

Manufacturing sites (*) and some of the larger sales companies.

Australia
ABB Industry Pty Ltd
2 Douglas Street
Port Melbourne,
Victoria, 3207
Tel: +61 (0) 3 9644 4100
Fax: +61 (0) 3 9646 9362

Austria
ABB AG
Clemens Holzmeisterstrasse 4
AT-1810 Wien
Tel: +43 (0) 1 601 090
Fax: +43 (0) 1 601 09 8305

Belgium
Asea Brown Boveri S.A.-N.V.
Hoge Wei 27
BE-1930 Zaventem
Tel: +32 (0) 2 718 6311
Fax: +32 (0) 2 718 6657

Canada
ABB Inc., BA Electrical Machines
10300 Henri-Bourassa Blvd, West,
Saint-Laurent, Quebec
Canada H4S 1N6
Tel: +1 514 832-6583
Fax: +1 514 332-0609

China*
ABB Shanghai Motors
Company Limited
8 Guang Xing Rd.,Rong Bei
Town, Songjiang County,
Shanghai 201613
Tel: +86 21 5778 0988
Fax: +86 21 5778 1364

Chile
Asea Brown Boveri S.A.
P.O.Box 581-3
Santiago
Tel: +56 (0) 2 5447 100
Fax: +56 (0) 2 5447 405

Denmark
ABB A/S
Automation Technology Electrical
Machines
Petersmindevej 1
DK-5000 Odense C
Tel: +45 65 477 070
Fax: +45 65 477 713

Finland*
ABB Oy
Motors
P.O.Box 633
FI-65101 Vaasa
Tel: +358 (0) 10 22 11
Fax: +358 (0) 10 22 47372

France
ABB Entrelec
ZA La Boisse BP 90145
300 Rue des Prés-Seigneurs
FR-01124 Montluel Cedex
Tel: +33 4 37 40 40 00
Fax: +33 4 37 40 40 72

Germany
ABB Automation Products GmbH
Motors & Drives
Wallstadter Strape 59
DE-68526 Ladenburg
Tel: +49 (0) 6203 717 565
Fax: +49 (0) 6203 717 570

Hong Kong
ABB (Hong Kong) Ltd.
Tai Po Industrial Estate,
3 Dai Hei Street,
Tai Po, New Territories,
Hong Kong
Tel: +852 2929 3838
Fax: +852 2929 3505

India*
ABB Ltd.
32, Industrial Area, N.I.T
Faridabad 121 001
Tel: +91 (0) 129 502 3001
Fax: +91 (0) 129 502 3006

Indonesia
PT. ABB Sakti Industri
JL. Gajah Tunggal Km.1
Jatiuwung, Tangerang 15136
Banten, Indonesia
Tel: + 62 21 590 9955
Fax: + 62 21 590 0115 - 6

Ireland
Asea Brown Boveri Ltd
Components Division
Belgard Road
Tallaght, Dublin 24
Tel: +353 (0) 1 405 7300
Fax: +353 (0) 1 405 7327

Italy*
ABB SACE SpA
LV Motors
Via Della Meccanica, 22
IT-20040 Caponago - MI
Tel: +39 02 959 6671
Fax: +39 02 959 667216

Japan
ABB K.K.
26-1 Cerulean Tower
Sakuragaoka-cho, Shibuya-ku
Tokyo 150-8512
Tel: +81 (0) 3 578 46251
Fax: +81 (0) 3 578 46260

Korea
ABB Korea Ltd.
7-9fl, Oksan Bldg., 157-33
Sungsung-dong, Kangnam-ku
Seoul
Tel: +82 2 528 2329
Fax: +82 2 528 2338

Malaysia
ABB Malaysia Sdn. Bhd.
Lot 608, Jalan SS 13/1K
47500 Subang Jaya, Selangor
Tel: +60 3 5628 4888
Fax: +60 3 5631 2926

Mexico
ABB México, S.A. de C.V.
Apartado Postal 111
CP 54000 Tlalnepantla
Edo. de México, México
Tel: +52 5 328 1400
Fax: +52 5 390 3720

The Netherlands
ABB B.V.
Dept. LV motors (APP2R)
P.O.Box 301
NL-3000 AH Rotterdam
Tel: +31 (0) 10 4078 879
Fax: +31 (0) 10 4078 345

Norway
ABB AS
P.O.Box 154 Vollebekk
NO-0520 Oslo
Tel: +47 22 872 000
Fax: +47 22 872 541

Russia
ABB Industrial & Building
Systems Ltd.
Business Centre "Krugozor"
Obrucheva 30/1, Building 2
Moscow 117861
Tel: +7 495 960 2200, 956 93 93
Fax: +7 495 960 2209, 230 63 46

Singapore
ABB Industry Pte Ltd
2 Ayer Rajah Crescent
Singapore 139935
Tel: +65 6776 5711
Fax: +65 6778 0222

Spain*
ABB Automation Products S.A.
Division Motores
P.O.Box 81
ES-08200 Sabadell
Tel: +34 93 728 8500
Fax: +34 93 728 8741

Sweden*
ABB Automation Technologies AB
LV Motors
SE-721 70 Västerås
Tel: +46 (0) 21 329 000
Fax: +46 (0) 21 329 140

Switzerland
ABB Schweiz AG
Normelec/CMC Components
Motors&Drives
Badenerstrasse 790
Postfach
CH-8048 Zürich
Tel: +41 (0) 58 586 0000
Fax: +41 (0) 58 586 0603

Taiwan
ABB Ltd.
6F, No. 126, Nanking East Road,
Section 4i
Taipei, 105 Taiwan, R.O.C.
Tel: +886 (0) 2 2577 6090
Fax: +886 (0) 2 2577 9467

Thailand
ABB Limited (Thailand)
161/1 SG Tower,
Soi Mahadlekluang 3,
Rajdamri, Bangkok 10330
Tel: +66 2 665 1000
Fax: +66 2 665 1042

The United Kingdom
ABB Ltd.
Drives, Motors and Machines
Daresbury, Warrington
Cheshire, WA4 4BT
Tel: +44 (0)1925 741 111
Fax: +44 (0)1925 741 212

USA
ABB Inc.
Low Voltage Motors
16250 W. Glendale Drive
New Berlin, WI 53151
Tel: +1 262 785 3200
Fax: +1 262 785 8628

Venezuela
Asea Brown Boveri S.A.
P.O.Box 6649
Carmelitas,
Caracas 1010A
Tel: +58 (0) 2 238 2422
Fax: +58 (0) 2 239 6383

Printed in Finland, 12-2006/4.000,Printing place

Catalogue BU/Marine motors EN 12-2006

http://www.abb.com/motors&drives
http://online.abb.com/motors&drives